MODEL SHOWN: M-ILS200CC/CCL

DIMENSIONS IN INCHES (AND MILLIMETERS)

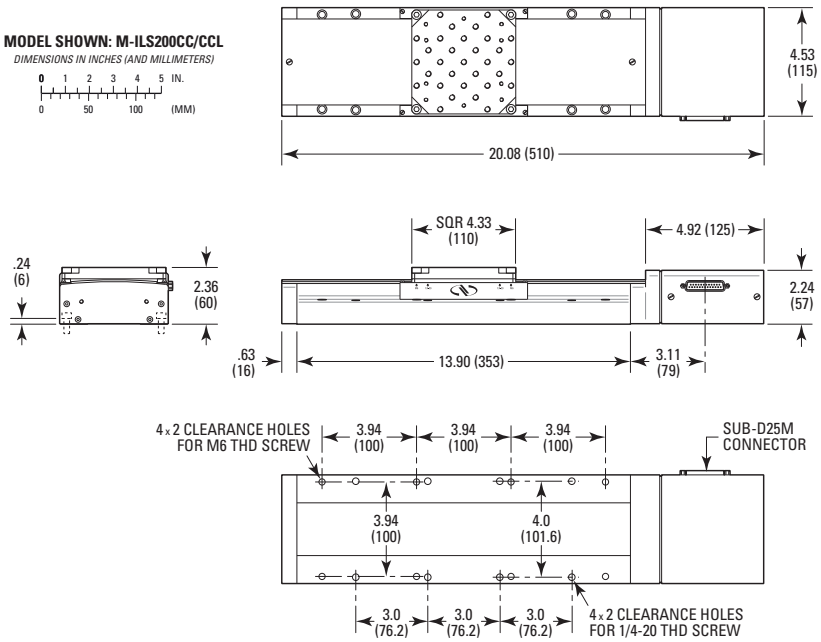

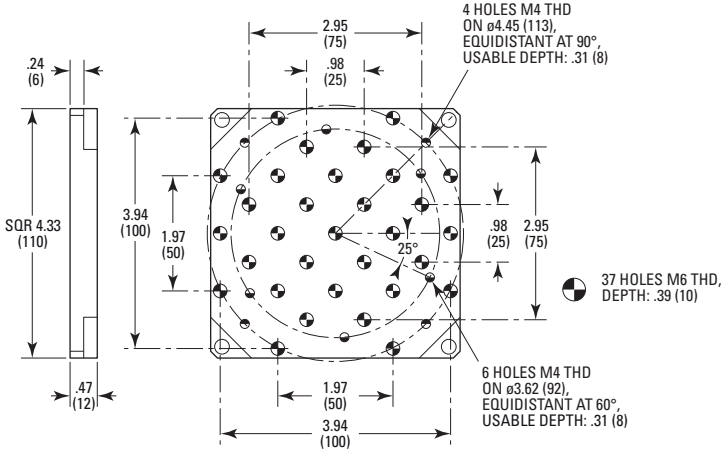

Newport