MODEL SHOWN: ILS50PP

DIMENSIONS IN INCHES (AND MILLIMETERS)

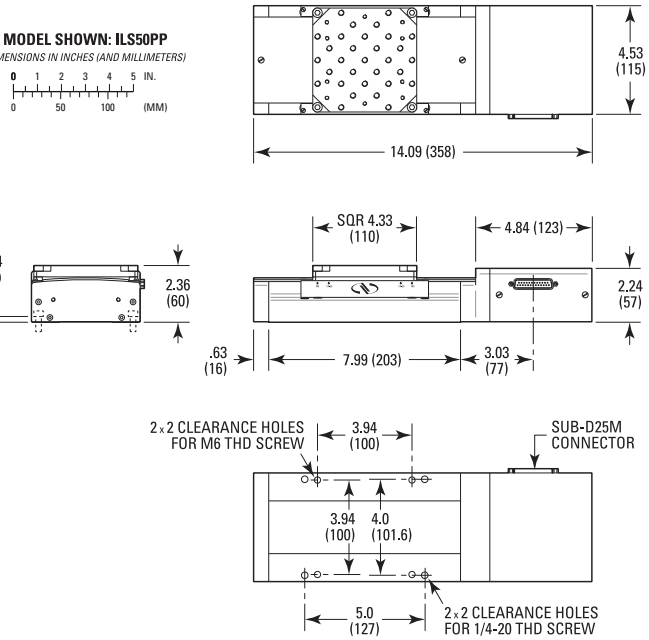

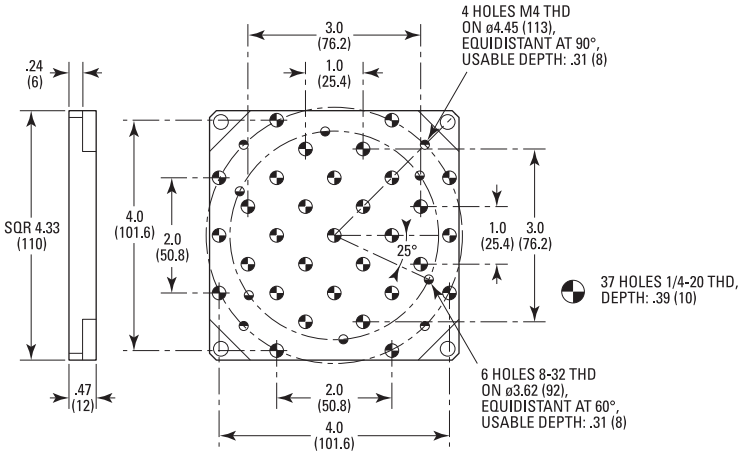

Newport