MODEL SHOWN: ILS250CC/CCL
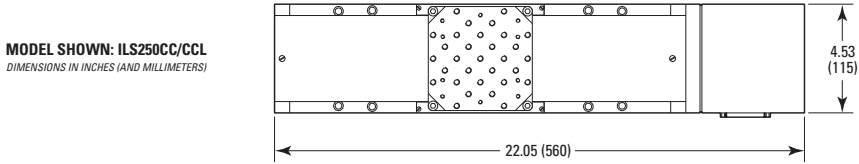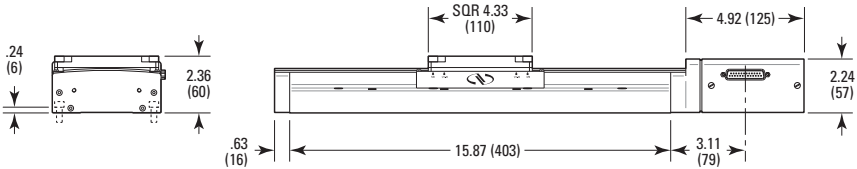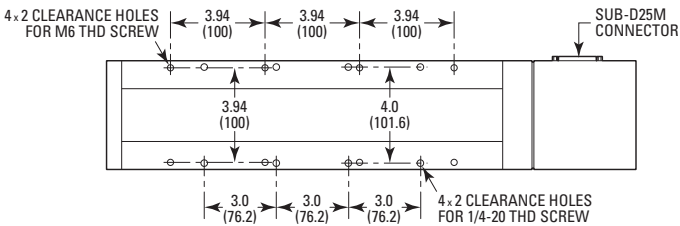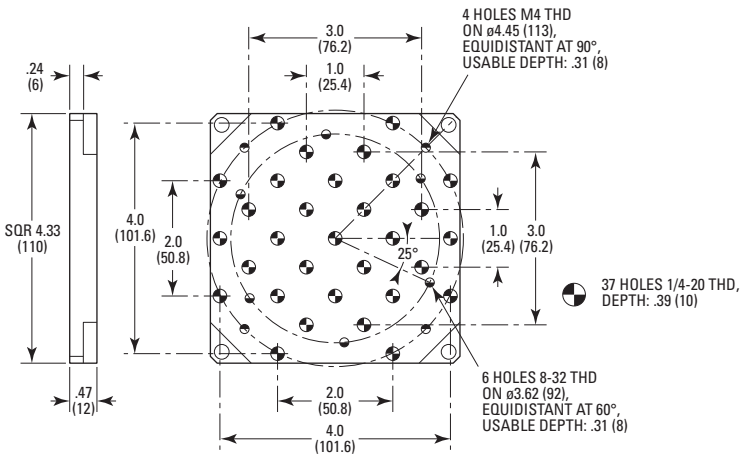
DIMENSIONS IN INCHES (AND MILLIMETERS)