MODEL SHOWN: ILS150CC/CCL
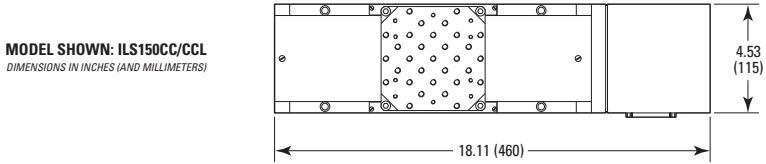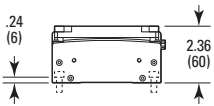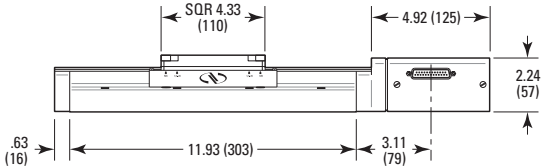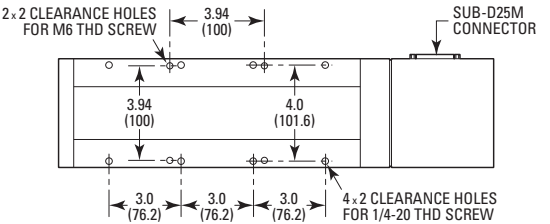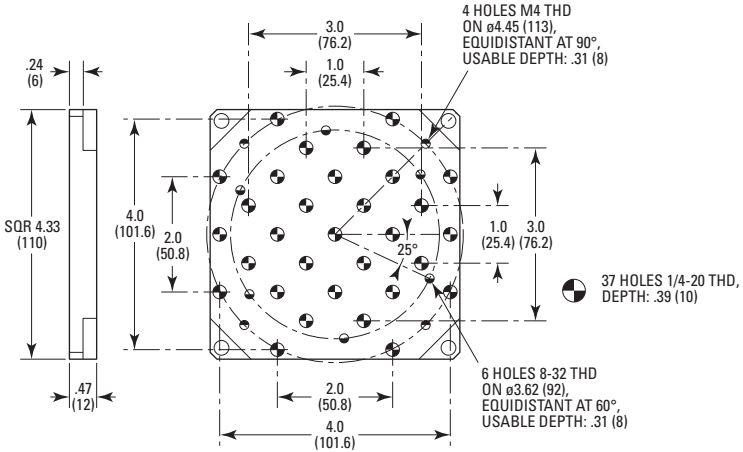
DIMENSIONS IN INCHES (AND MILLIMETERS)