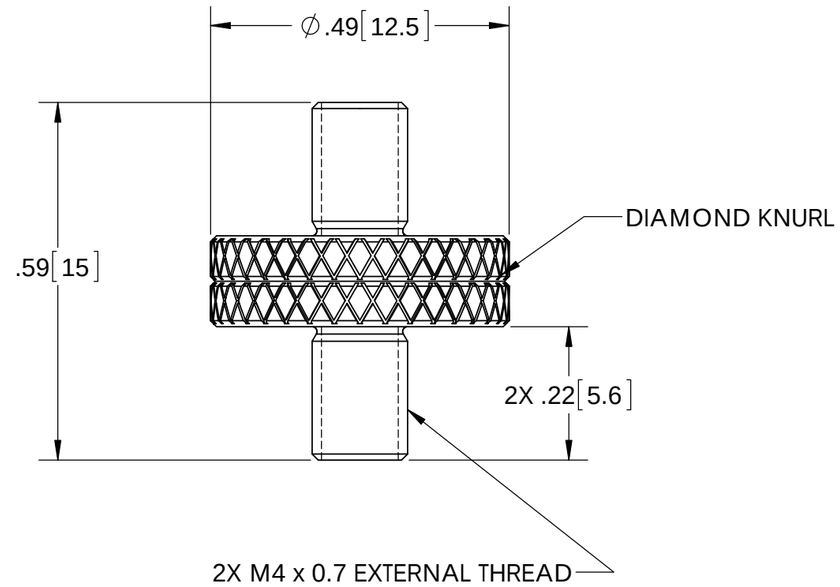

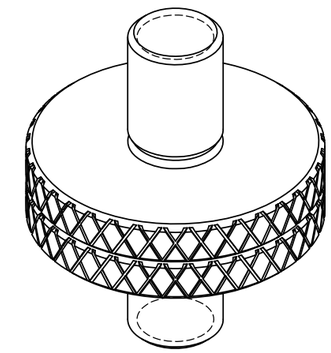

MODEL: M- SPE SET

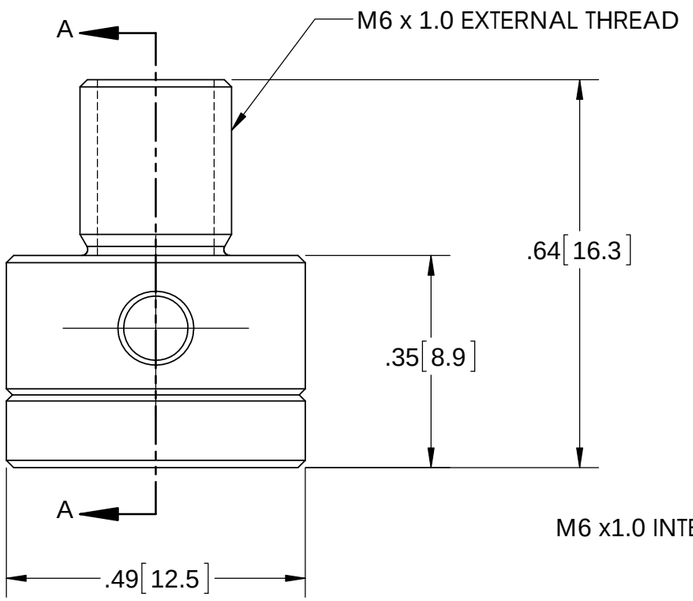

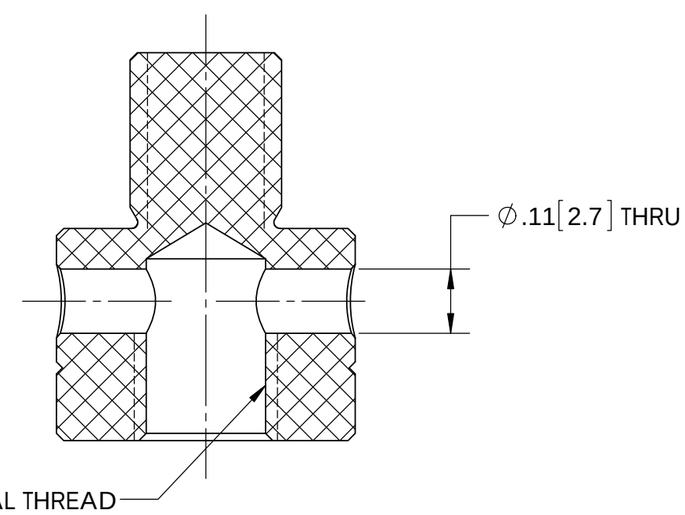

SECTION A-A

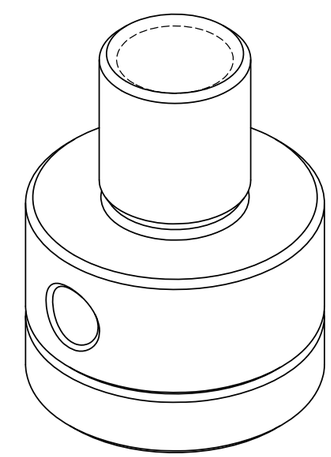

Newport®
Experience | Solutions