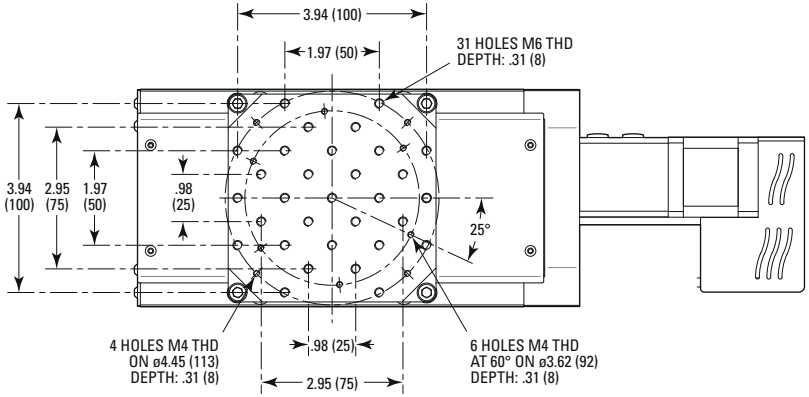

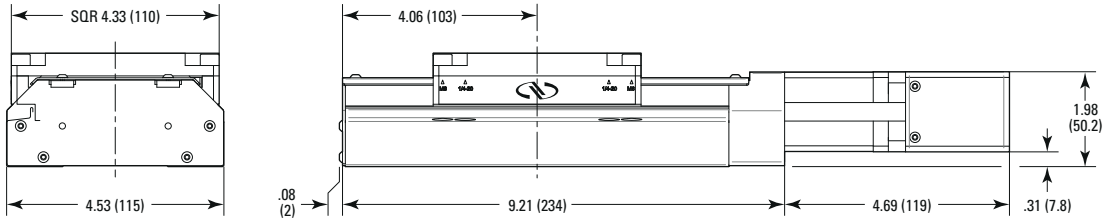

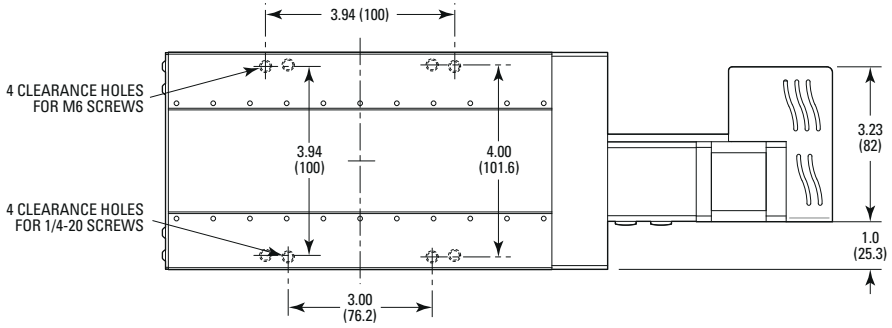

MODEL SHOWN: FCL50

DIMENSIONS IN INCHES (AND MILLIMETERS)

Newport