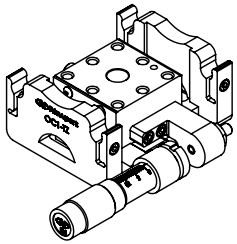

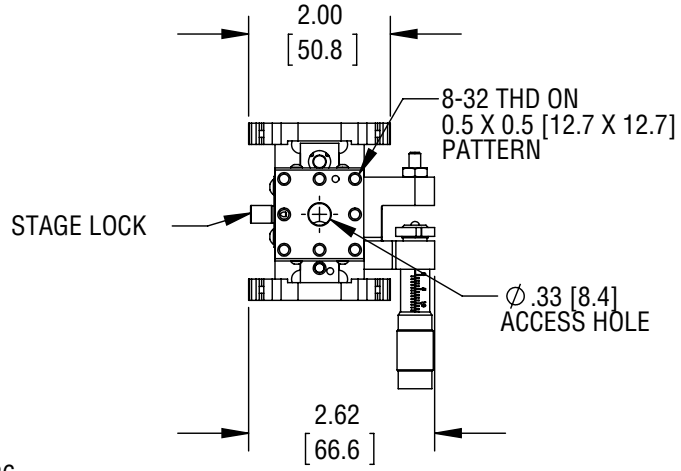
2.00
[50.8]
8-32 THD ON
0.5 X 0.5 [12.7 X 12.7]
PATTERN
STAGE LOCK
∅ .33 [8.4]
ACCESS HOLE
2.62
[66.6]

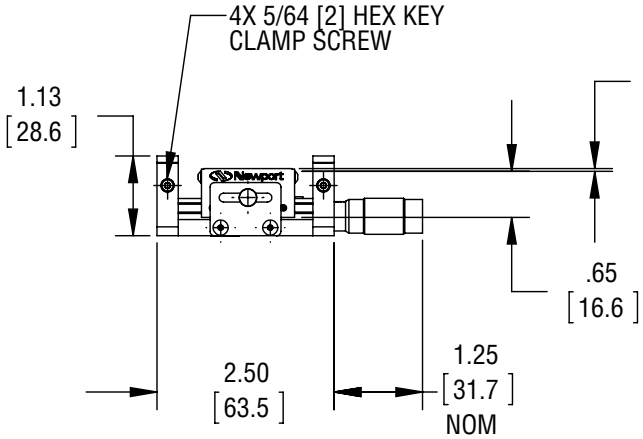
4X 5/64 [2] HEX KEY
CLAMP SCREW
1.13
[28.6]
.036
[0.92]
ROD TO STAGE
SURFACE
.65
[16.6]
2.50
[63.5]
1.25
[31.7]
NOM

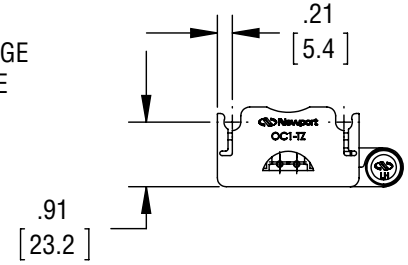
.21
[5.4]
.91
[23.2]

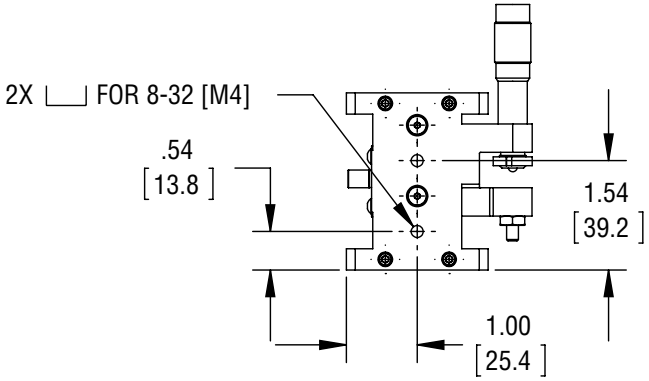
2X FOR 8-32 [M4]
.54
[13.8]
1.54
[39.2]
1.00
[25.4]

Newport