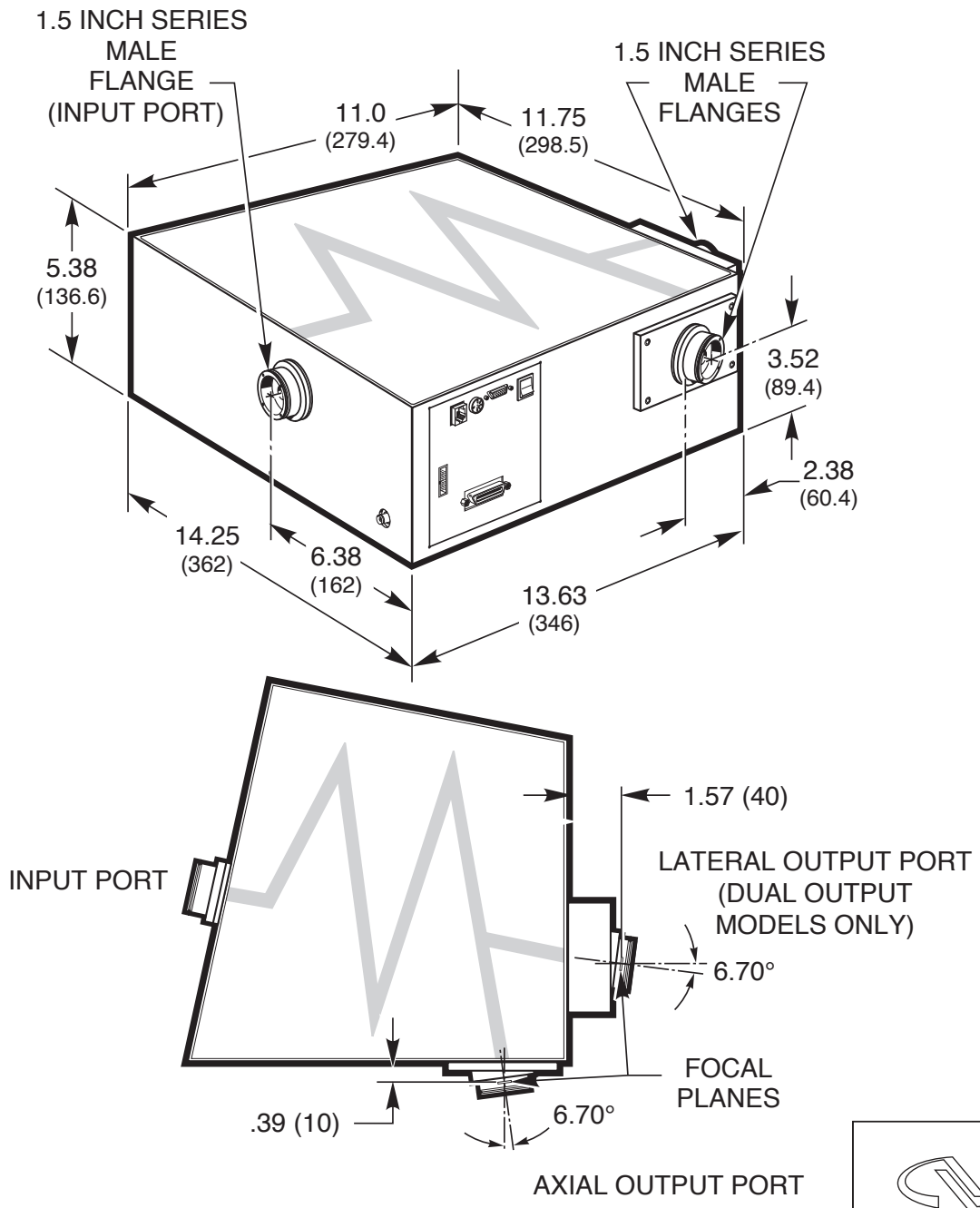
1.5 INCH SERIES
MALE
FLANGE
(INPUT PORT)
11.0
(279.4)
11.75
(298.5)
1.5 INCH SERIES
MALE
FLANGES
5.38
(136.6)
3.52
(89.4)
2.38
(60.4)
14.25
(362)
6.38
(162)
13.63
(346)
1.57 (40)
INPUT PORT
LATERAL OUTPUT PORT
(DUAL OUTPUT
MODELS ONLY)
6.70°
FOCAL
PLANES
.39 (10)
6.70°
AXIAL OUTPUT PORT

Newport