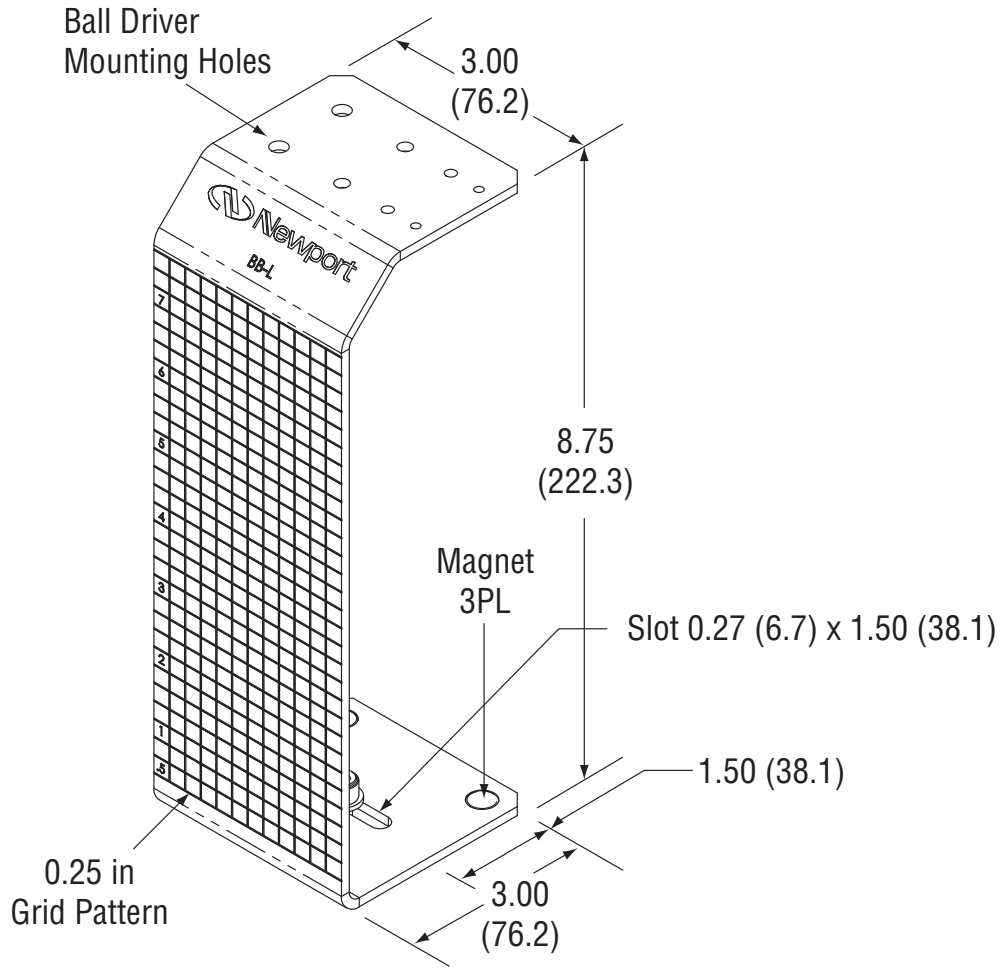
Ball Driver
Mounting Holes
3.00
(76.2)
Newport
BB-L
8.75
(222.3)
Magnet
3PL
Slot 0.27 (6.7) x 1.50 (38.1)
1.50 (38.1)
0.25 in
Grid Pattern
3.00
(76.2)

Newport