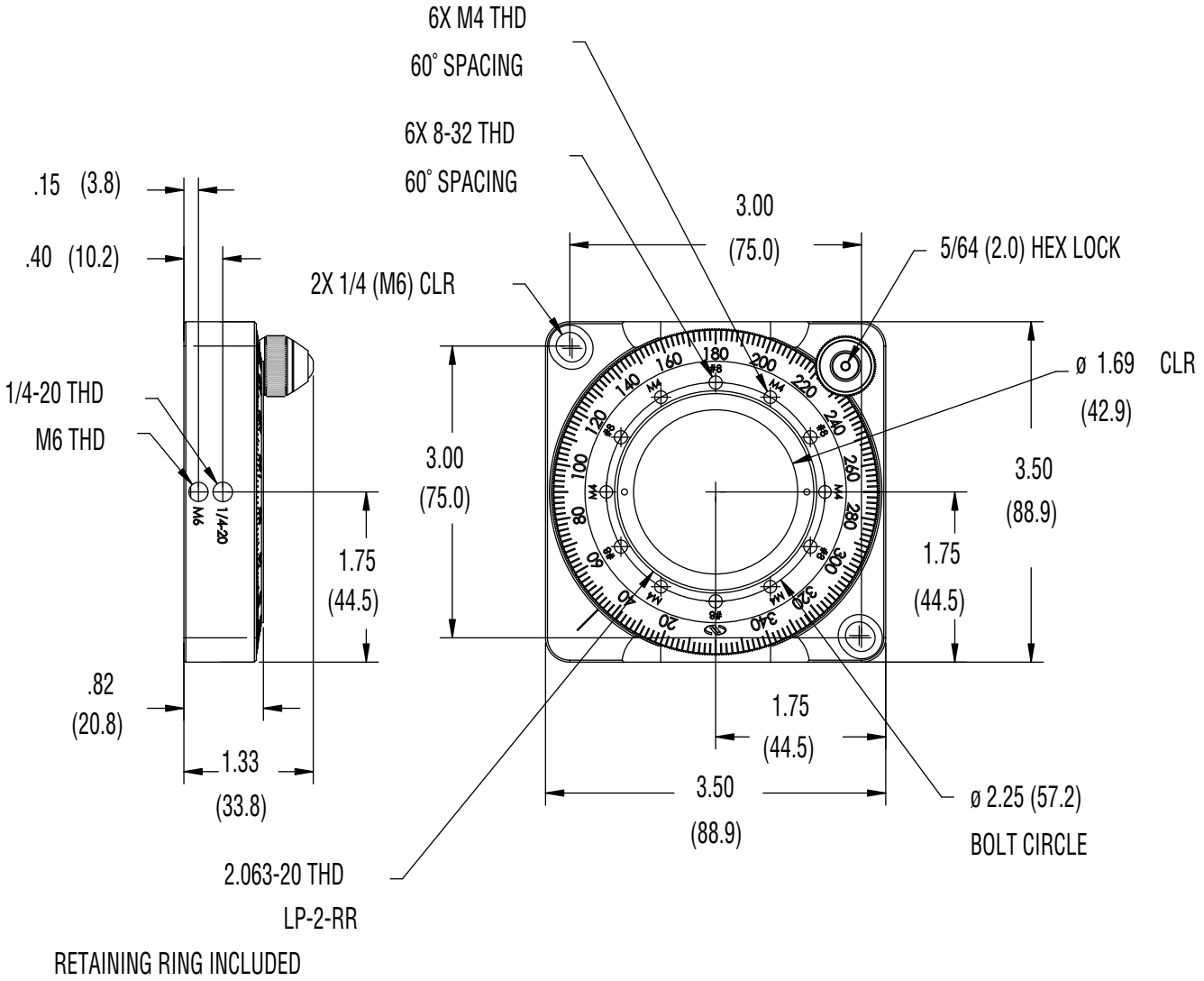
6X M4 THD
60˚ SPACING
6X 8-32 THD
60˚ SPACING
.15 (3.8)
.40 (10.2)
2X 1/4 (M6) CLR
3.00
(75.0)
5/64 (2.0) HEX LOCK
ø 1.69 CLR
(42.9)
1/4-20 THD
M6 THD
M6
1/4-20
3.00
(75.0)
3.50
(88.9)
1.75
(44.5)
1.75
(44.5)
.82
(20.8)
1.33
(33.8)
1.75
(44.5)
3.50
(88.9)
ø 2.25 (57.2)
BOLT CIRCLE
2.063-20 THD
LP-2-RR
RETAINING RING INCLUDED

Newport