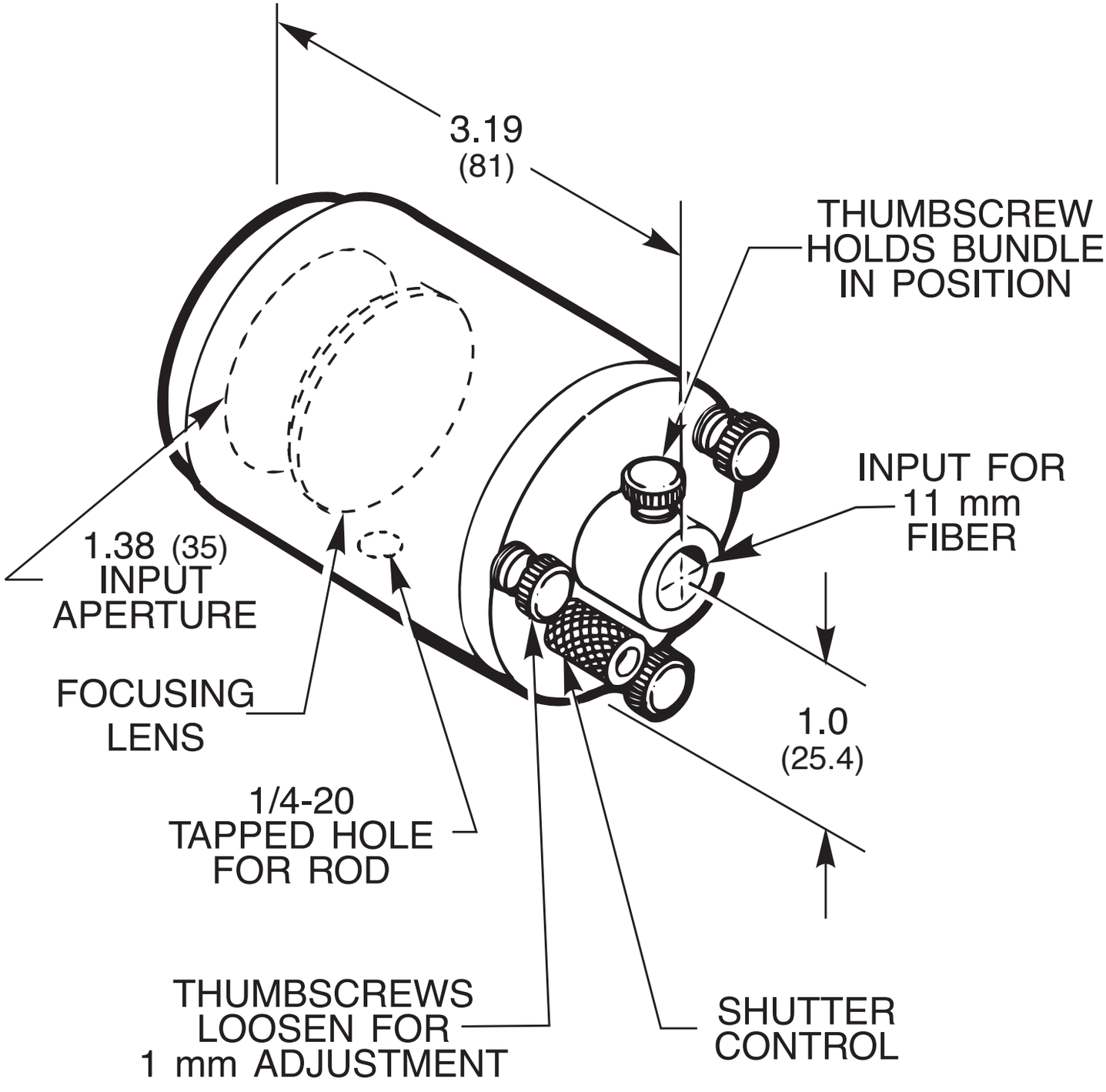
3.19
(81)
THUMBSCREW
HOLDS BUNDLE
IN POSITION
INPUT FOR
11 mm
FIBER
1.38 (35)
INPUT
APERTURE
FOCUSING
LENS
1.0
(25.4)
1/4-20
TAPPED HOLE
FOR ROD
THUMBSCREWS
LOOSEN FOR
1 mm ADJUSTMENT
SHUTTER
CONTROL