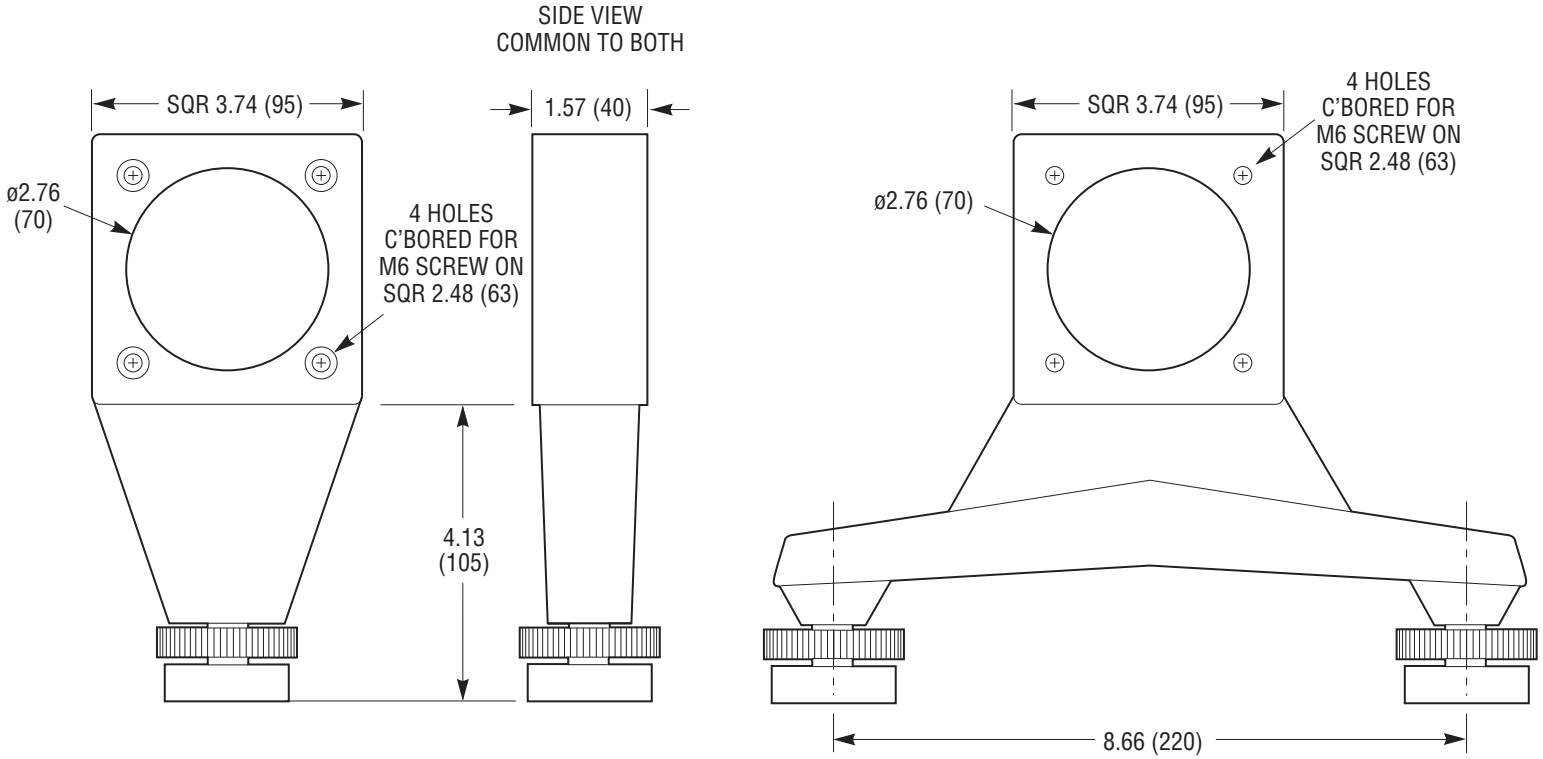
SIDE VIEW
COMMON TO BOTH
SQR 3.74 (95)
1.57 (40)
ø2.76
(70)
4 HOLES
C'BORED FOR
M6 SCREW ON
SQR 2.48 (63)
4.13
(105)
SQR 3.74 (95)
4 HOLES
C'BORED FOR
M6 SCREW ON
SQR 2.48 (63)
ø2.76 (70)
8.66 (220)

Newport