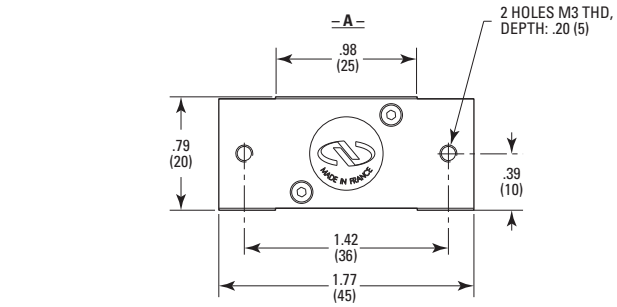

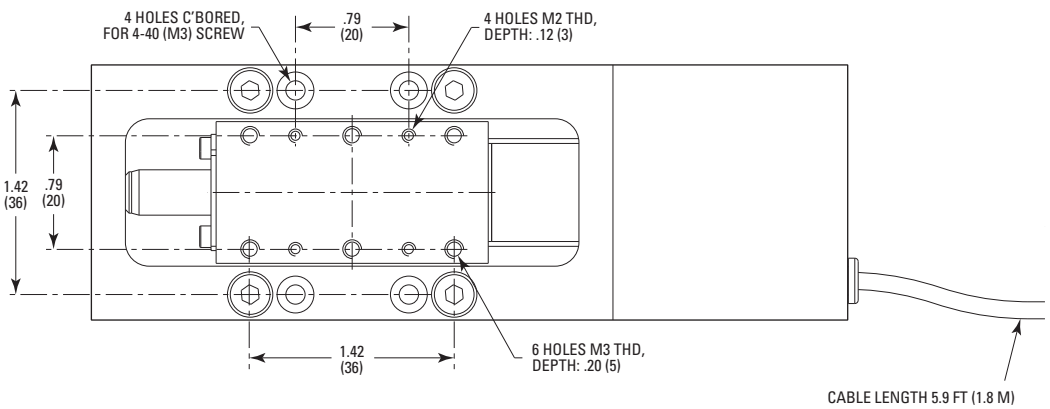

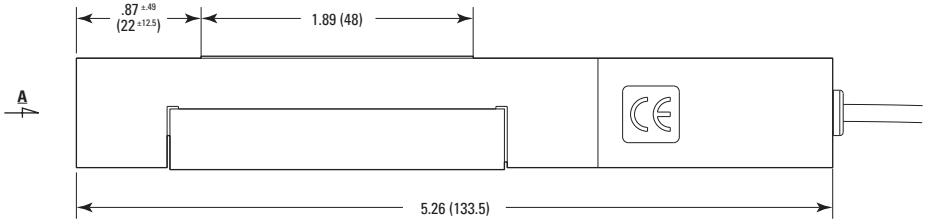

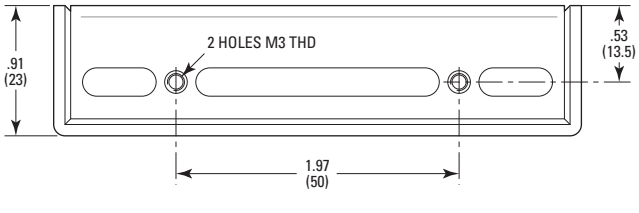

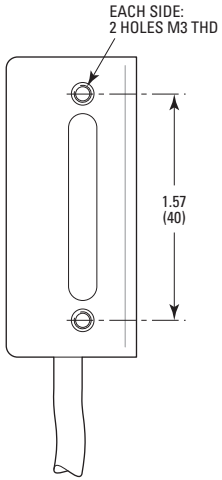

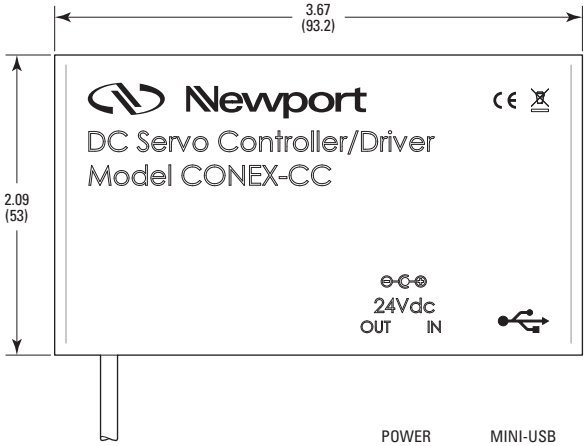

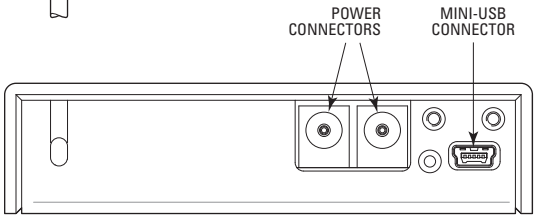

MODEL SHOWN: CONEX-MFACC

DIMENSIONS IN INCHES (AND MILLIMETERS)

SCALE 3:4

Newport