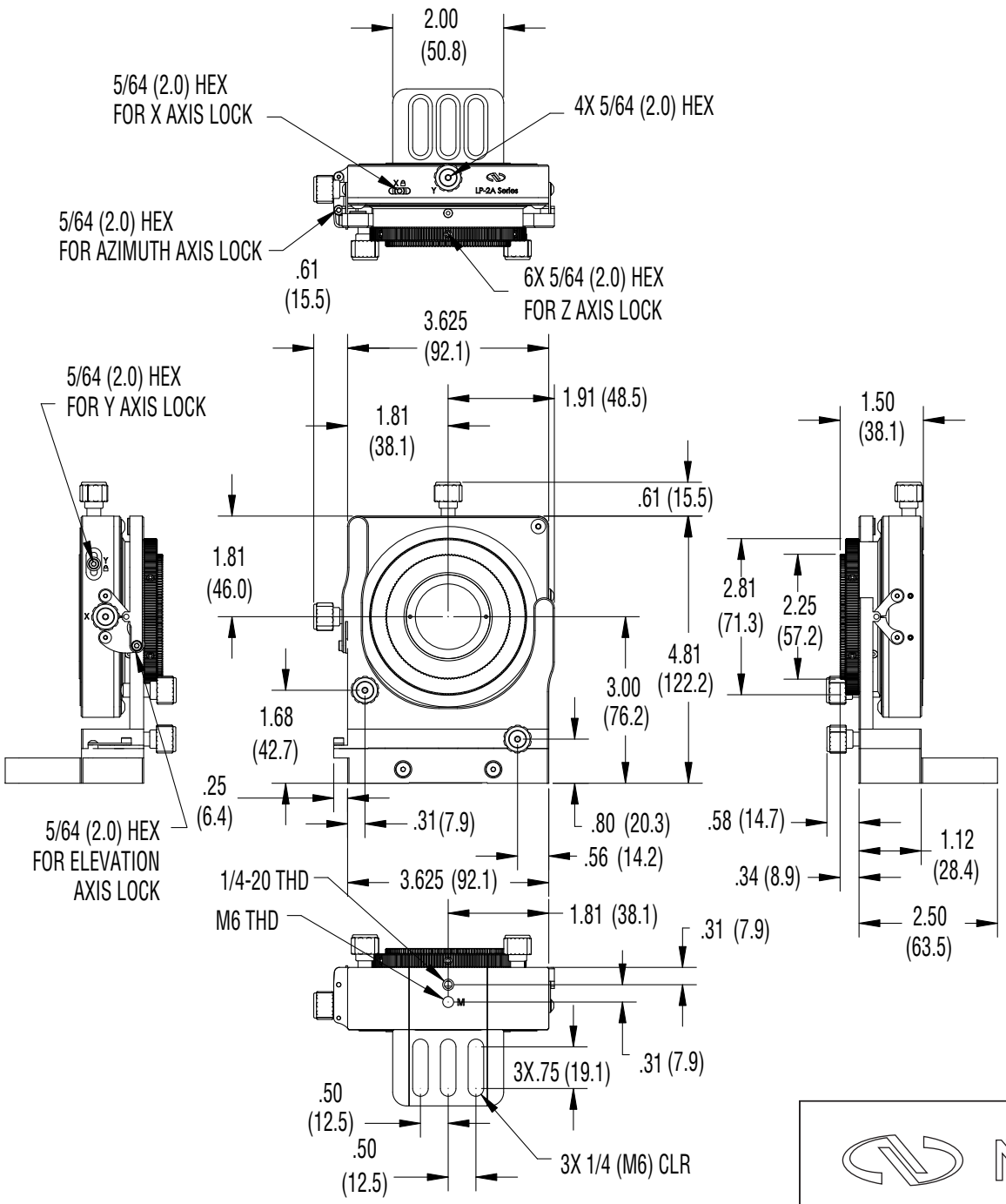
2.00
(50.8)
5/64 (2.0) HEX
FOR X AXIS LOCK
4X 5/64 (2.0) HEX
5/64 (2.0) HEX
FOR AZIMUTH AXIS LOCK
.61
(15.5)
6X 5/64 (2.0) HEX
FOR Z AXIS LOCK
3.625
(92.1)
5/64 (2.0) HEX
FOR Y AXIS LOCK
1.81
(38.1)
1.91 (48.5)
1.50
(38.1)
.61 (15.5)
1.81
(46.0)
2.81
(71.3)
2.25
(57.2)
4.81
(122.2)
3.00
(76.2)
1.68
(42.7)
.25
(6.4)
.31(7.9)
.80 (20.3)
.58 (14.7)
1.12
(28.4)
5/64 (2.0) HEX
FOR ELEVATION
AXIS LOCK
.56 (14.2)
.34 (8.9)
1/4-20 THD
3.625 (92.1)
M6 THD
1.81 (38.1)
.31 (7.9)
2.50
(63.5)
.31 (7.9)
3X.75 (19.1)
.50
(12.5)
.50
(12.5)
3X 1/4 (M6) CLR
Newport