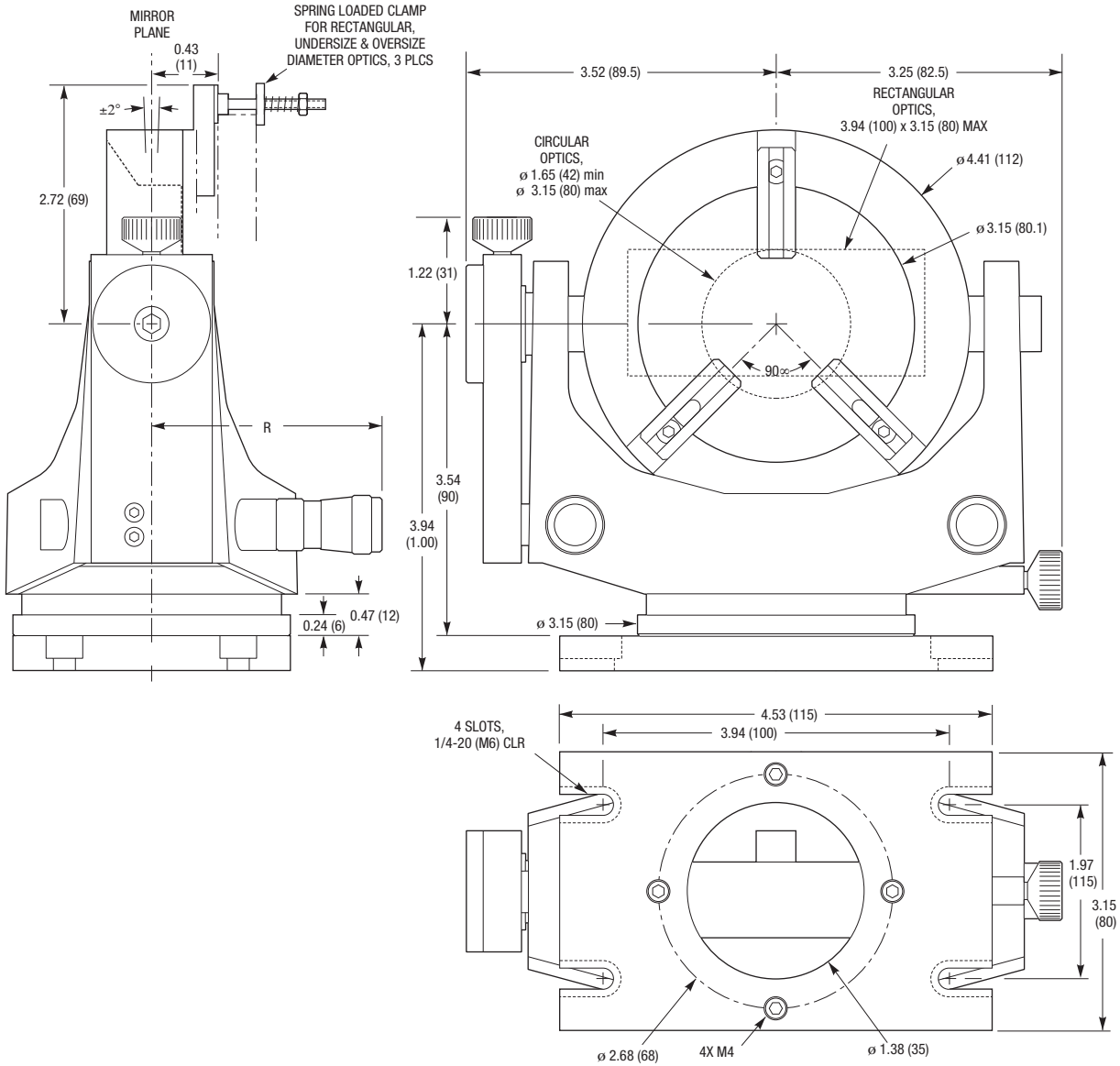
MIRROR PLANE
0.43 (11)
SPRING LOADED CLAMP FOR RECTANGULAR, UNDERSIZE & OVERSIZE DIAMETER OPTICS, 3 PLCS
±2°
2.72 (69)
R
0.24 (6)
0.47 (12)
3.52 (89.5)
3.25 (82.5)
RECTANGULAR OPTICS, 3.94 (100) x 3.15 (80) MAX
CIRCULAR OPTICS, ø 1.65 (42) min ø 3.15 (80) max
ø 4.41 (112)
ø 3.15 (80.1)
1.22 (31)
90°
3.54 (90)
3.94 (1.00)
ø 3.15 (80)
4.53 (115)
3.94 (100)
4 SLOTS, 1/4-20 (M6) CLR
1.97 (115)
3.15 (80)
ø 2.68 (68)
4X M4
ø 1.38 (35)

Newport®