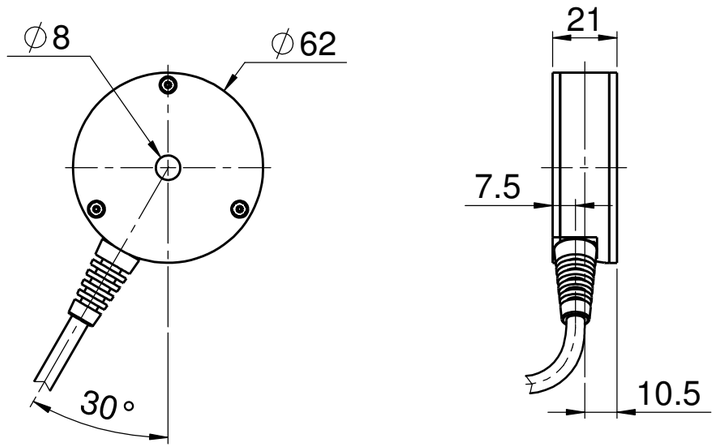
∅8
∅62
30°
21
7.5
10.5

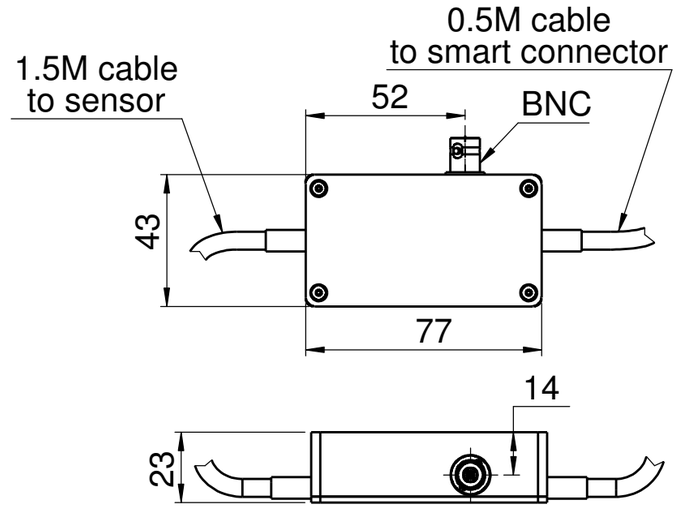
1.5M cable
to sensor
0.5M cable
to smart connector
52
BNC
43
77
14
23

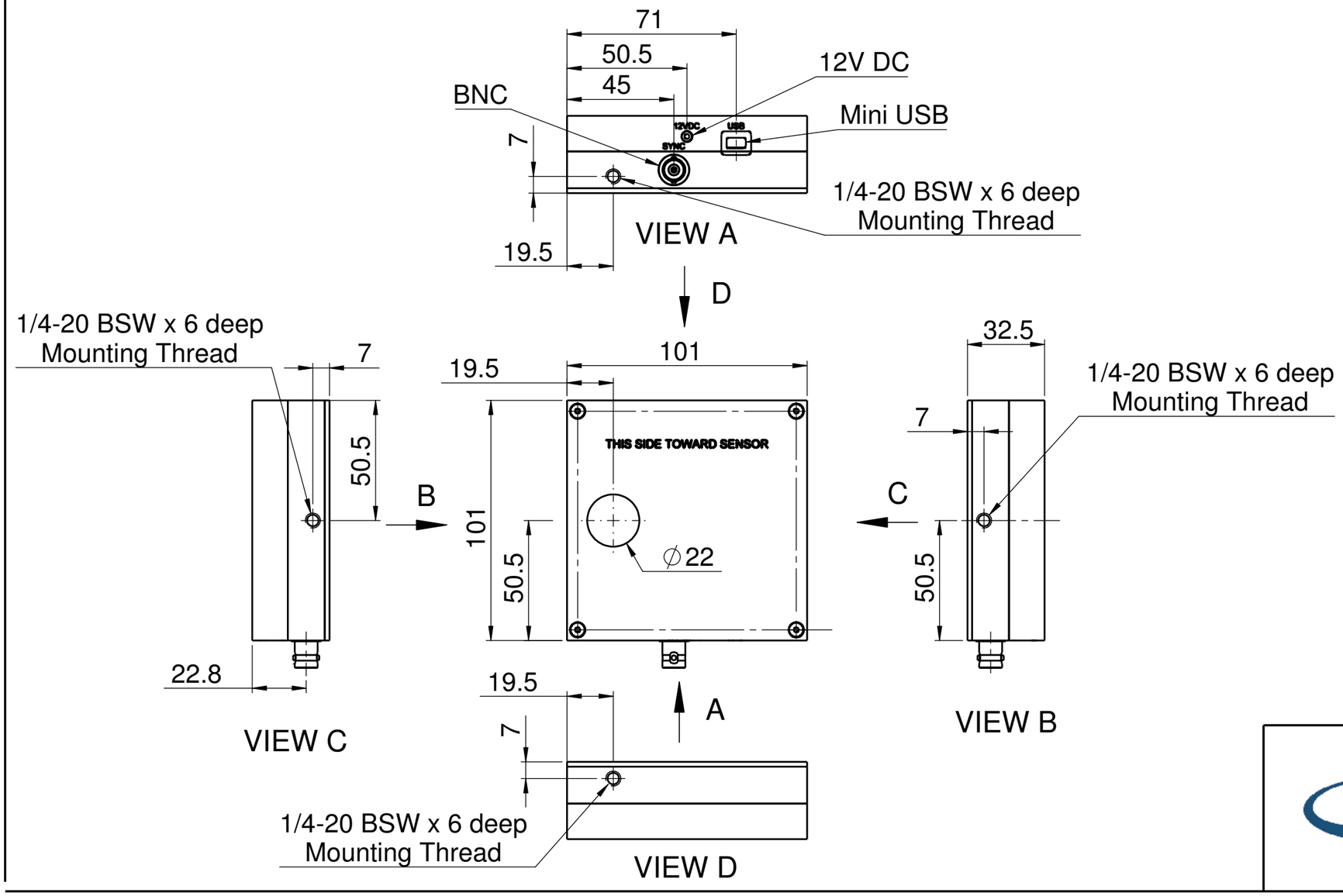
71
50.5
45
12V DC
BNC
Mini USB
7
1/4-20 BSW x 6 deep
Mounting Thread
VIEW A
19.5
D
1/4-20 BSW x 6 deep
Mounting Thread
7
50.5
B
22.8
VIEW C
19.5
101
THIS SIDE TOWARD SENSOR
101
50.5
∅22
19.5
7
A
1/4-20 BSW x 6 deep
Mounting Thread
VIEW D
32.5
1/4-20 BSW x 6 deep
Mounting Thread
7
C
50.5
VIEW B

Newport®