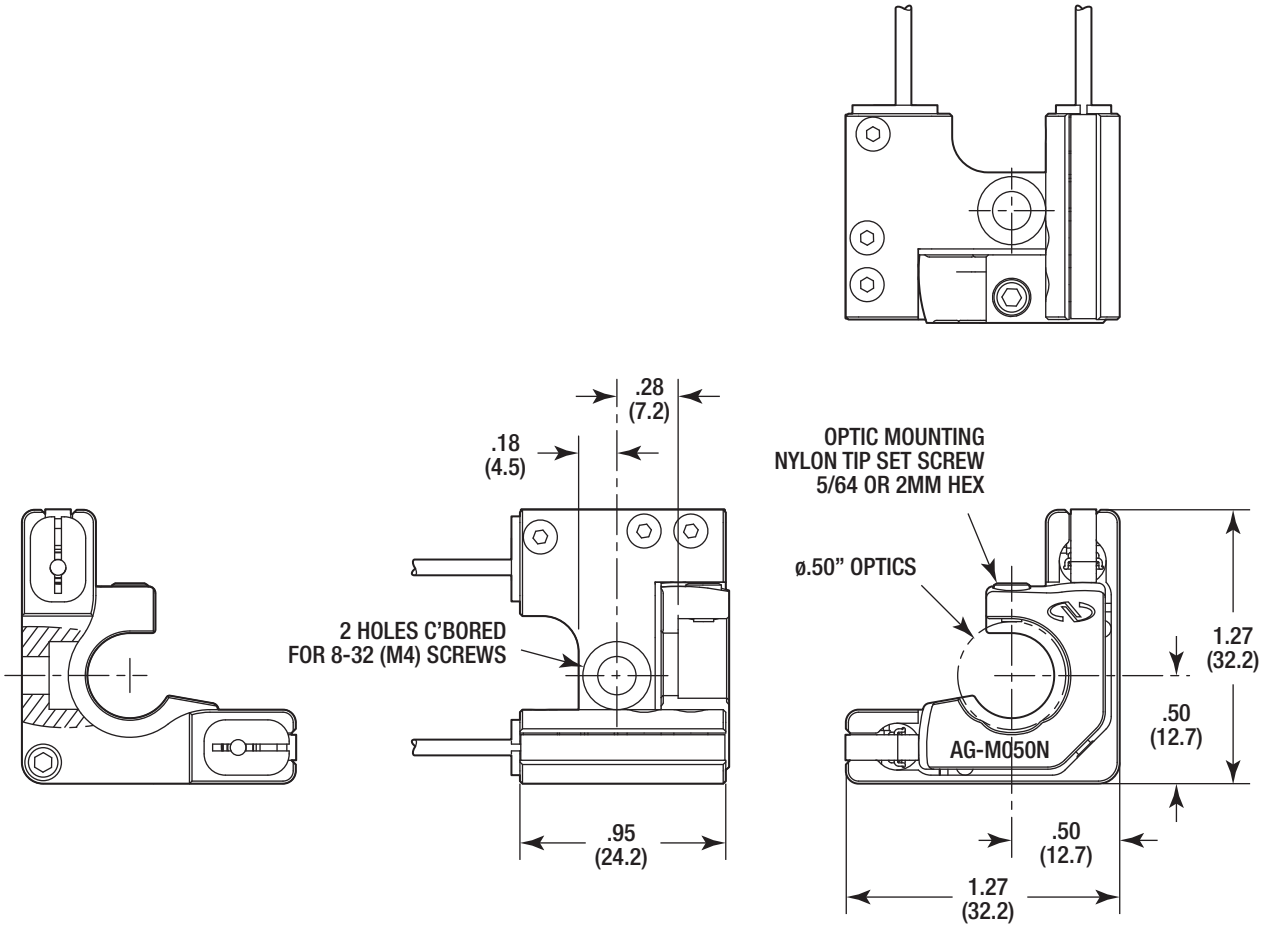
.28
(7.2)
.18
(4.5)
OPTIC MOUNTING
NYLON TIP SET SCREW
5/64 OR 2MM HEX
ø.50" OPTICS
2 HOLES C'BORED
FOR 8-32 (M4) SCREWS
1.27
(32.2)
.50
(12.7)
AG-M050N
.95
(24.2)
.50
(12.7)
1.27
(32.2)

Newport