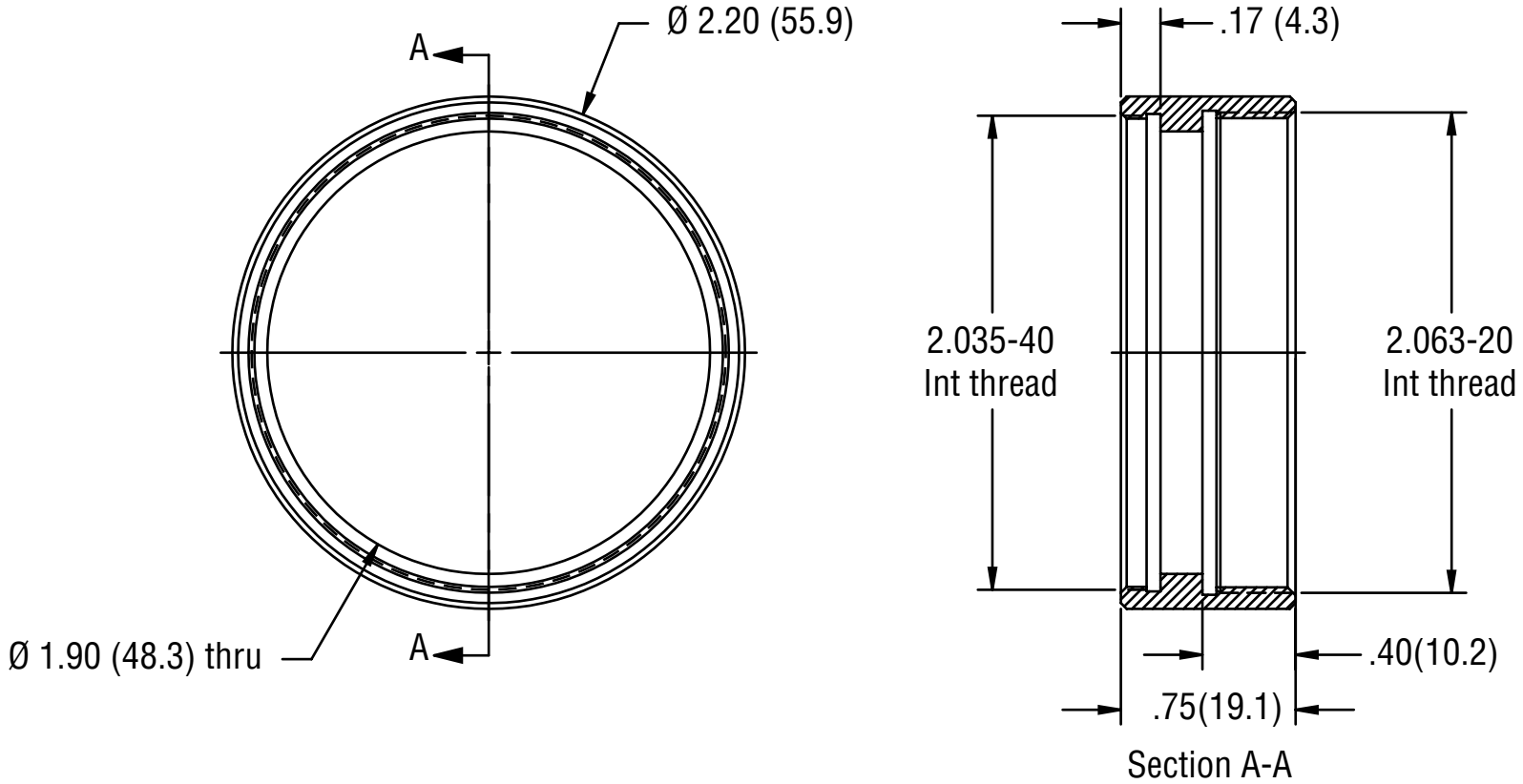
Ø 2.20 (55.9)
A
A
Ø 1.90 (48.3) thru
.17 (4.3)
2.035-40
Int thread
2.063-20
Int thread
.40(10.2)
.75(19.1)
Section A-A

Newport