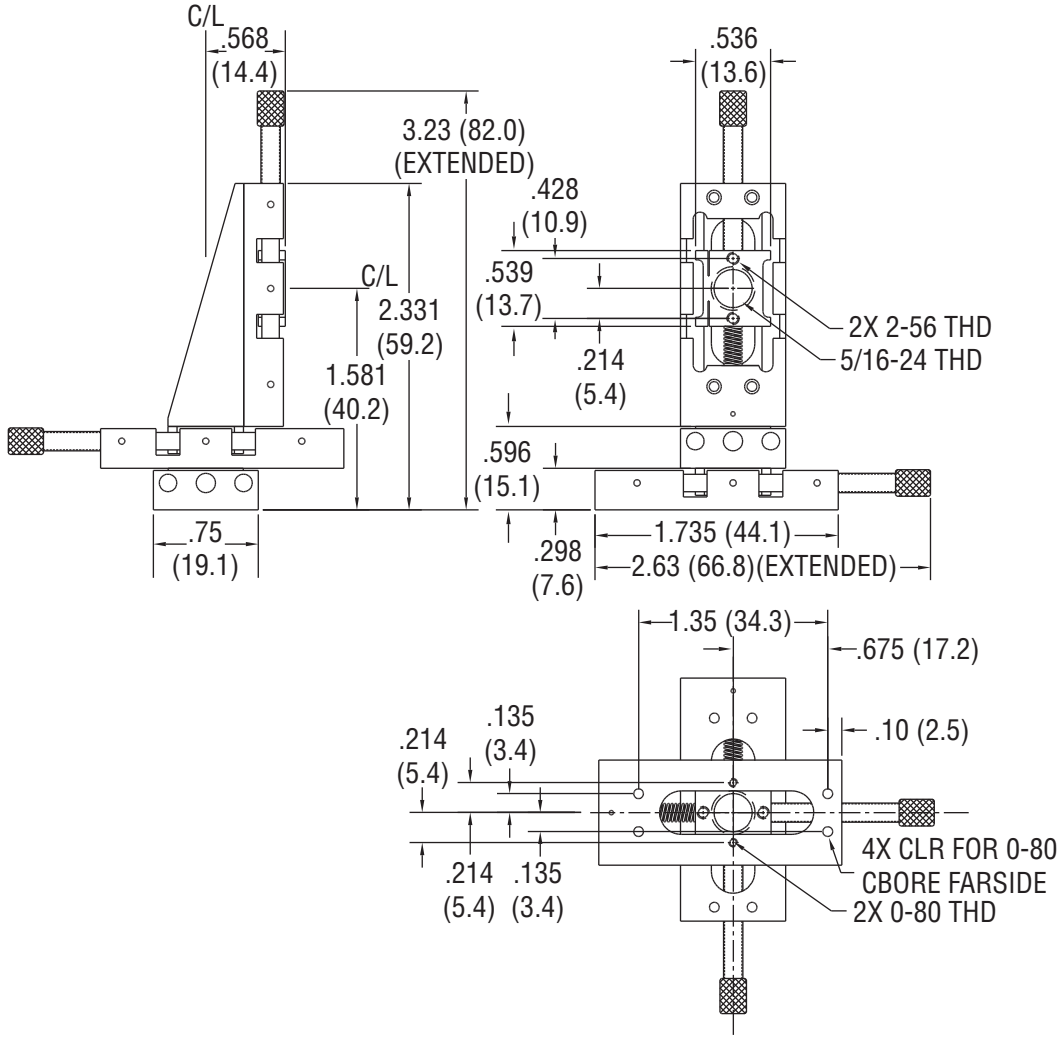
C/L
.568
(14.4)
3.23 (82.0)
(EXTENDED)
C/L
2.331
(59.2)
1.581
(40.2)
.75
(19.1)
.536
(13.6)
.428
(10.9)
.539
(13.7)
.214
(5.4)
2X 2-56 THD
5/16-24 THD
.596
(15.1)
.298
(7.6)
1.735 (44.1)
2.63 (66.8)(EXTENDED)
1.35 (34.3)
.675 (17.2)
.10 (2.5)
.214
(5.4)
.135
(3.4)
.214
(5.4)
.135
(3.4)
4X CLR FOR 0-80
CBORE FARSIDE
2X 0-80 THD

Newport