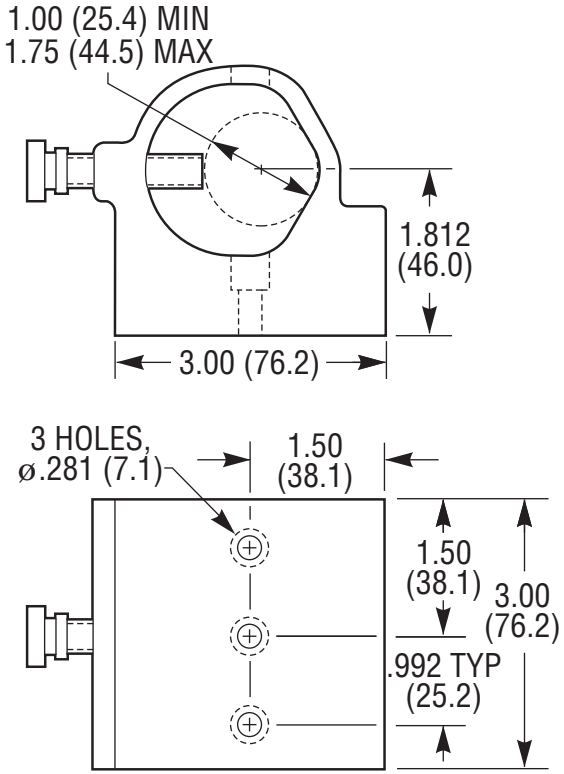
1.00 (25.4) MIN
1.75 (44.5) MAX
1.812
(46.0)
3.00 (76.2)
3 HOLES,
ø.281 (7.1)
1.50
(38.1)
1.50
(38.1)
3.00
(76.2)
.992 TYP
(25.2)

Newport