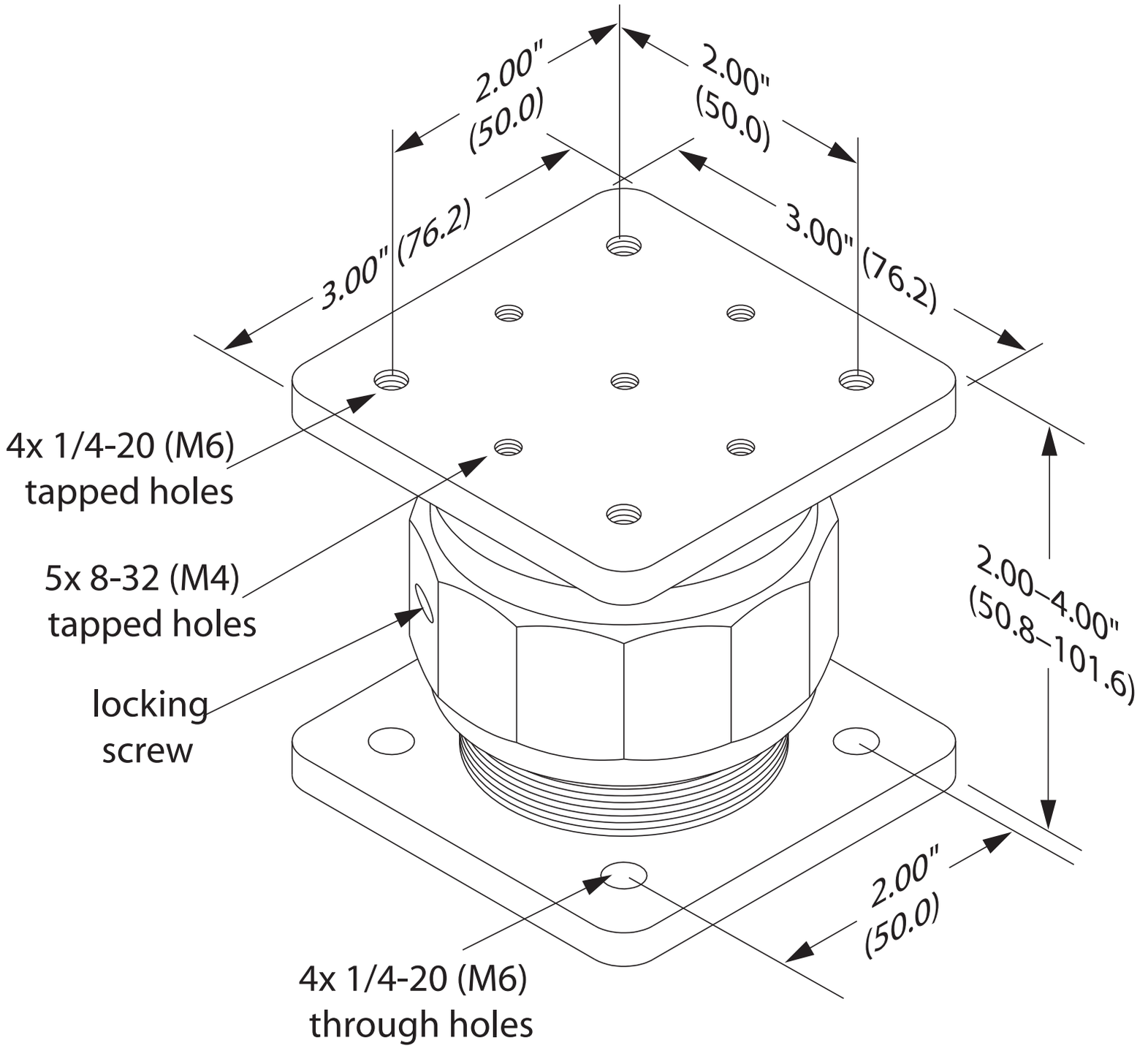
2.00"
(50.0)
2.00"
(50.0)
3.00" (76.2)
3.00" (76.2)
4x 1/4-20 (M6)
tapped holes
5x 8-32 (M4)
tapped holes
locking
screw
2.00–4.00"
(50.8–101.6)
2.00"
(50.0)
4x 1/4-20 (M6)
through holes