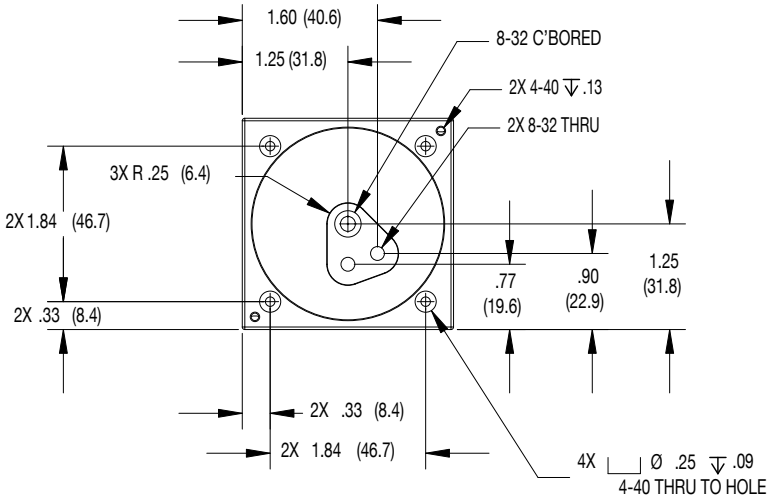

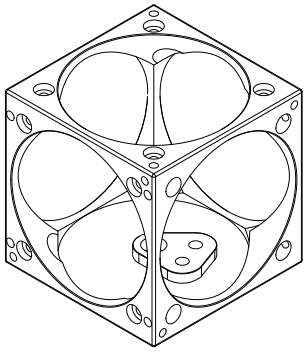

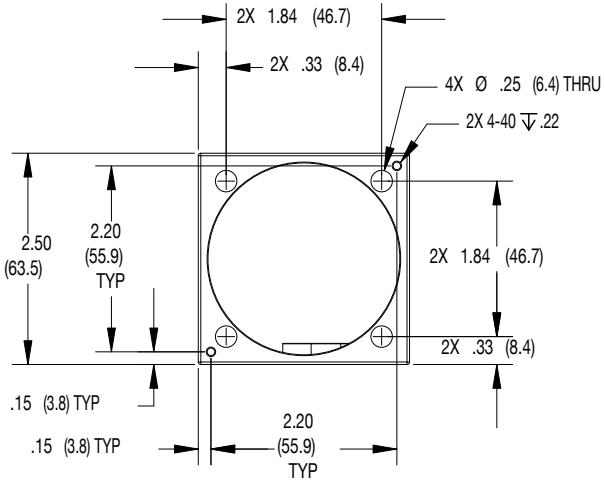

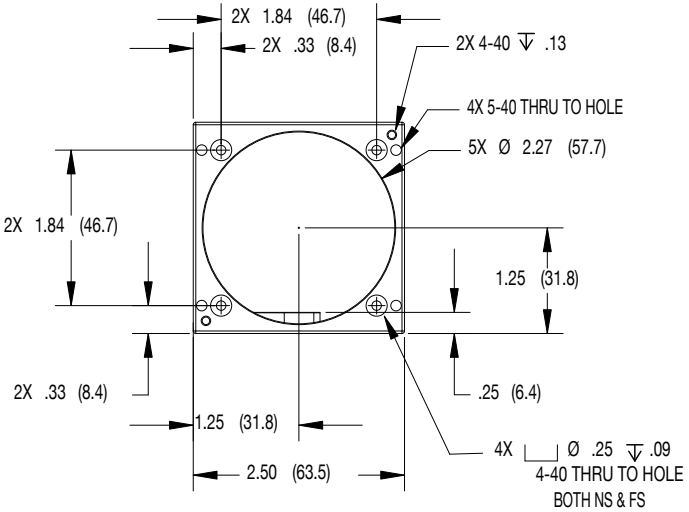

Dimensions in inches (mm)

Newport