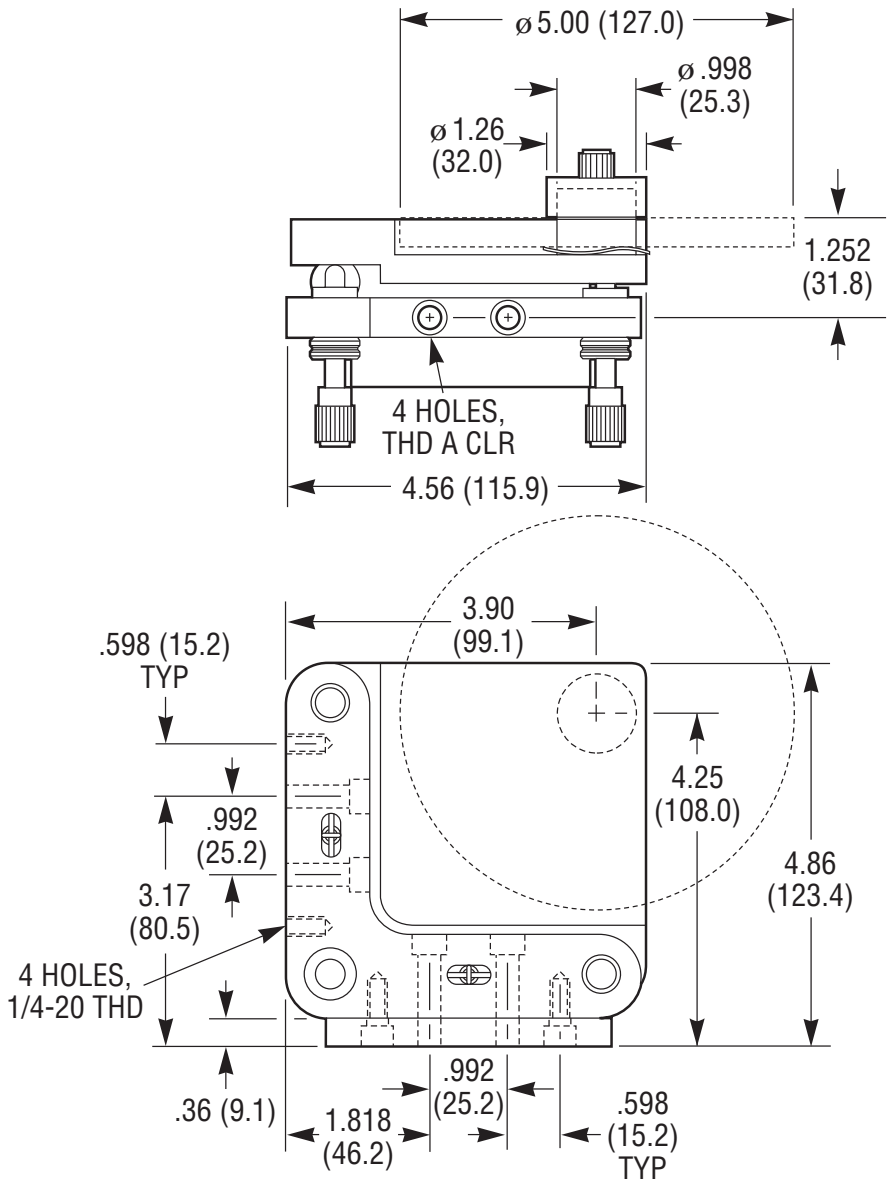
ø 5.00 (127.0)
ø .998
(25.3)
ø 1.26
(32.0)
1.252
(31.8)
4 HOLES,
THD A CLR
4.56 (115.9)
3.90
(99.1)
.598 (15.2)
TYP
4.25
(108.0)
.992
(25.2)
4.86
(123.4)
3.17
(80.5)
4 HOLES,
1/4-20 THD
.36 (9.1)
1.818
(46.2)
.992
(25.2)
.598
(15.2)
TYP

New Focus™