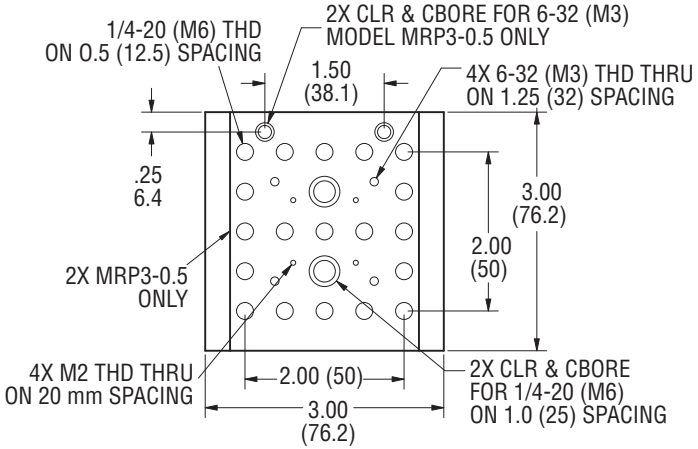

MRP3-0.25

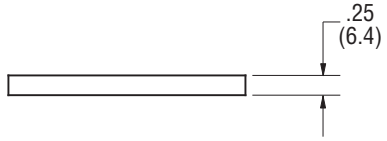

MRP3-0.5

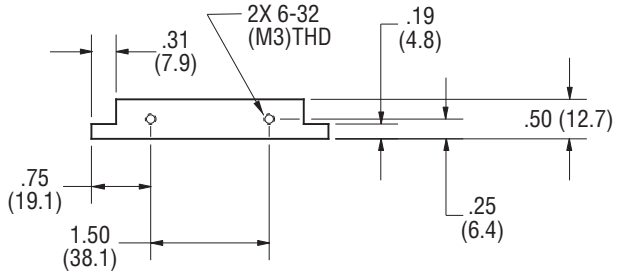

MRP3-1

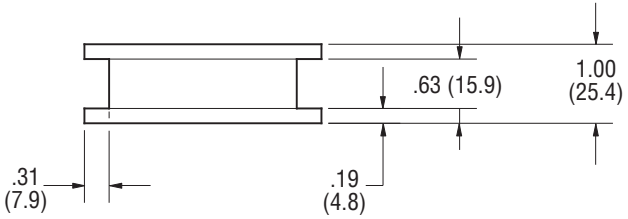

Newport