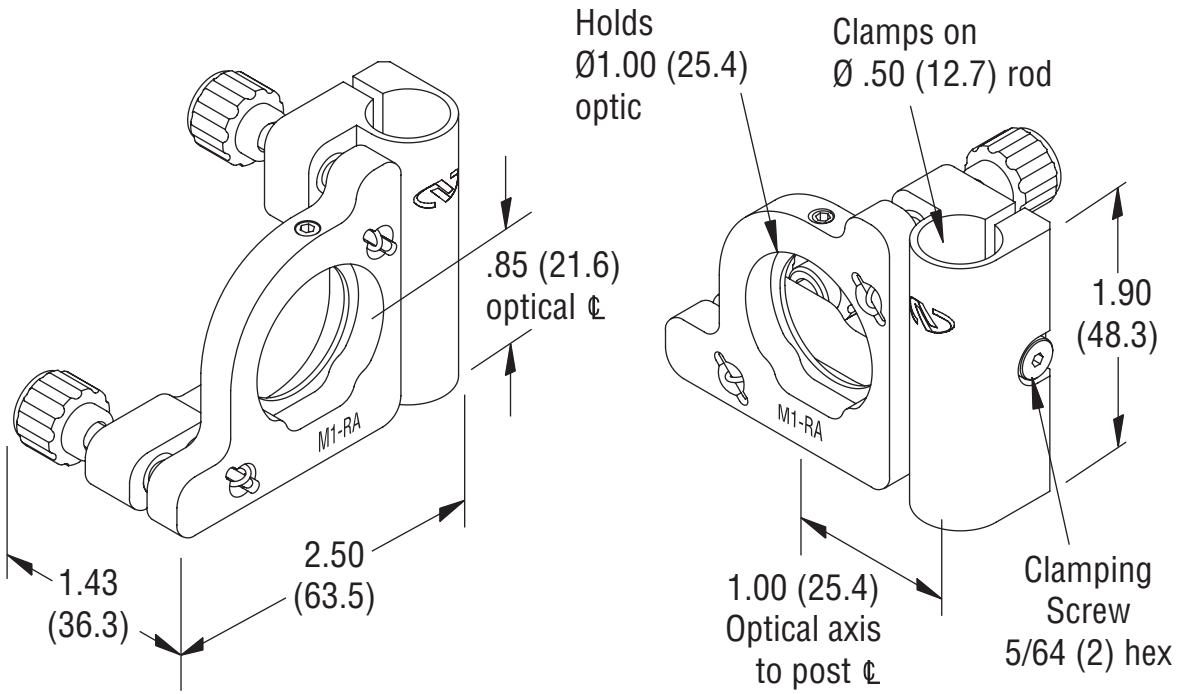
Holds
Ø1.00 (25.4)
optic
Clamps on
Ø .50 (12.7) rod
.85 (21.6)
optical ℄
1.90
(48.3)
M1-RA
M1-RA
1.43
(36.3)
2.50
(63.5)
1.00 (25.4)
Optical axis
to post ℄
Clamping
Screw
5/64 (2) hex

Newport