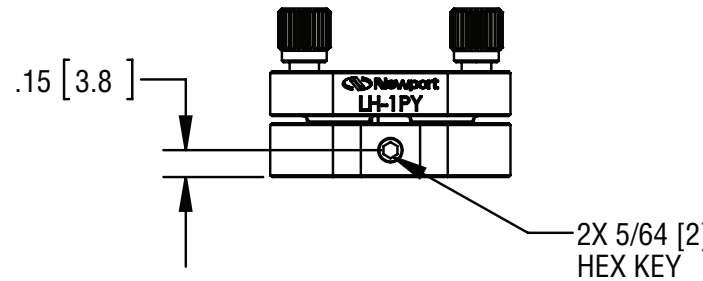

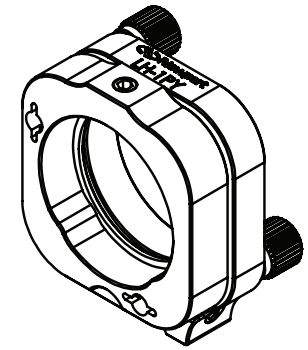

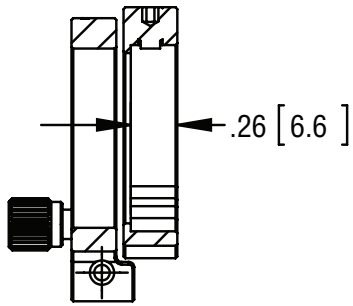

SECTION A-A

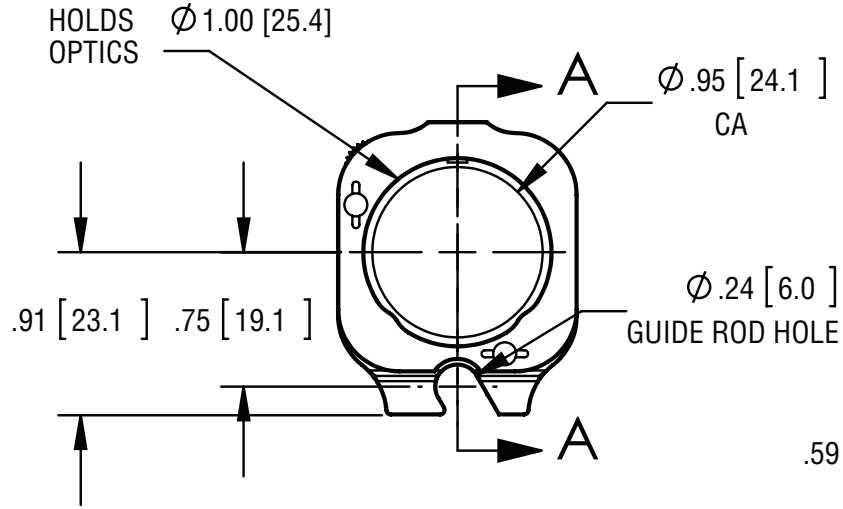

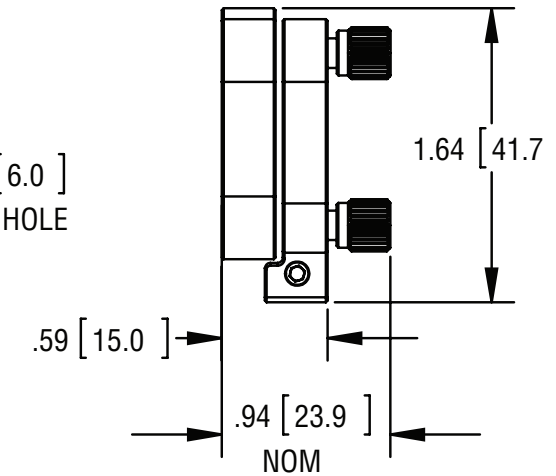

Newport