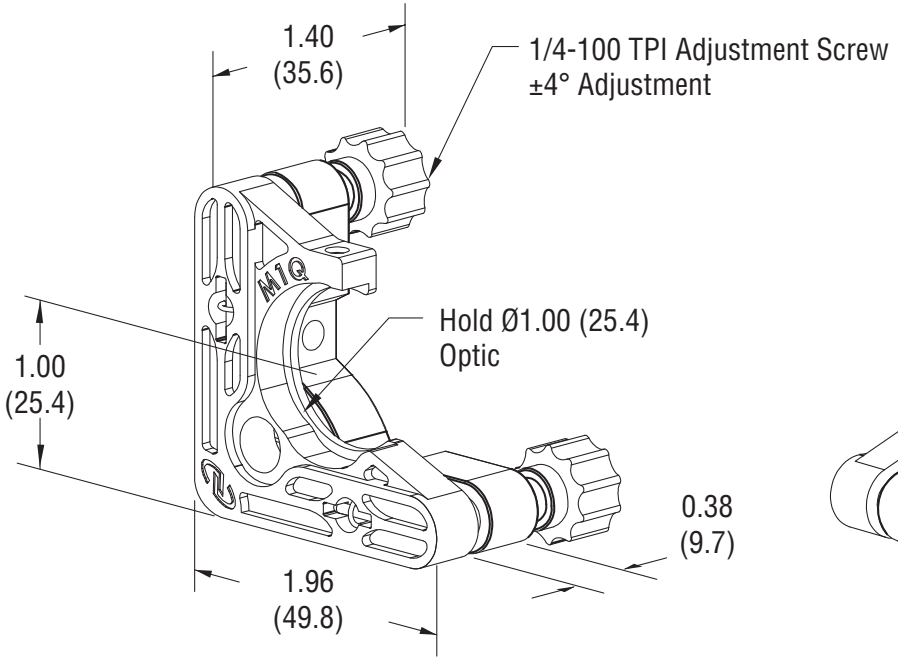
1.40
(35.6)
1/4-100 TPI Adjustment Screw
±4° Adjustment
M1Q
Hold Ø1.00 (25.4)
Optic
1.00
(25.4)
0.38
(9.7)
1.96
(49.8)

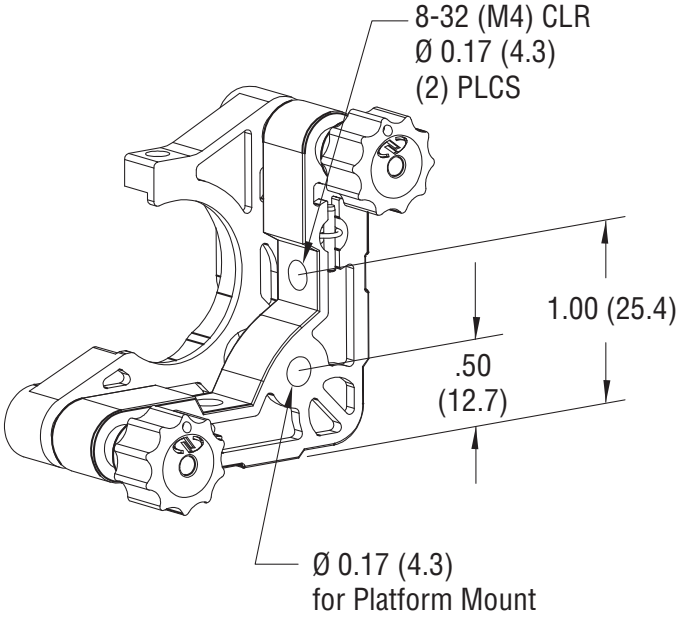
8-32 (M4) CLR
Ø 0.17 (4.3)
(2) PLCS
1.00 (25.4)
.50
(12.7)
Ø 0.17 (4.3)
for Platform Mount

Newport