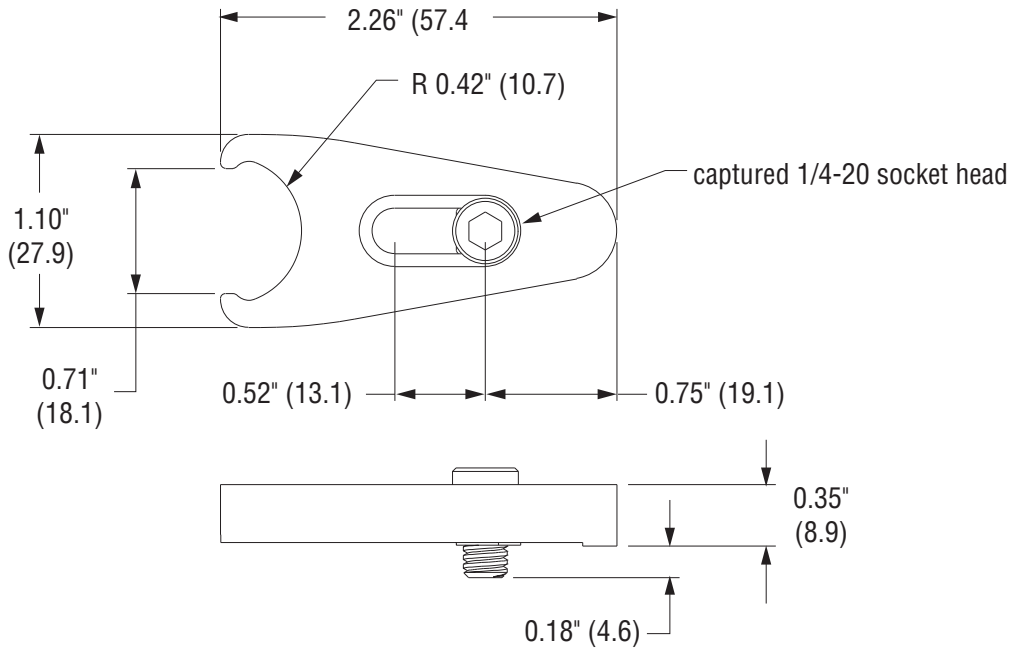
2.26" (57.4
R 0.42" (10.7)
captured 1/4-20 socket head
1.10"
(27.9)
0.71"
(18.1)
0.52" (13.1)
0.75" (19.1)
0.35"
(8.9)
0.18" (4.6)

New Focus™