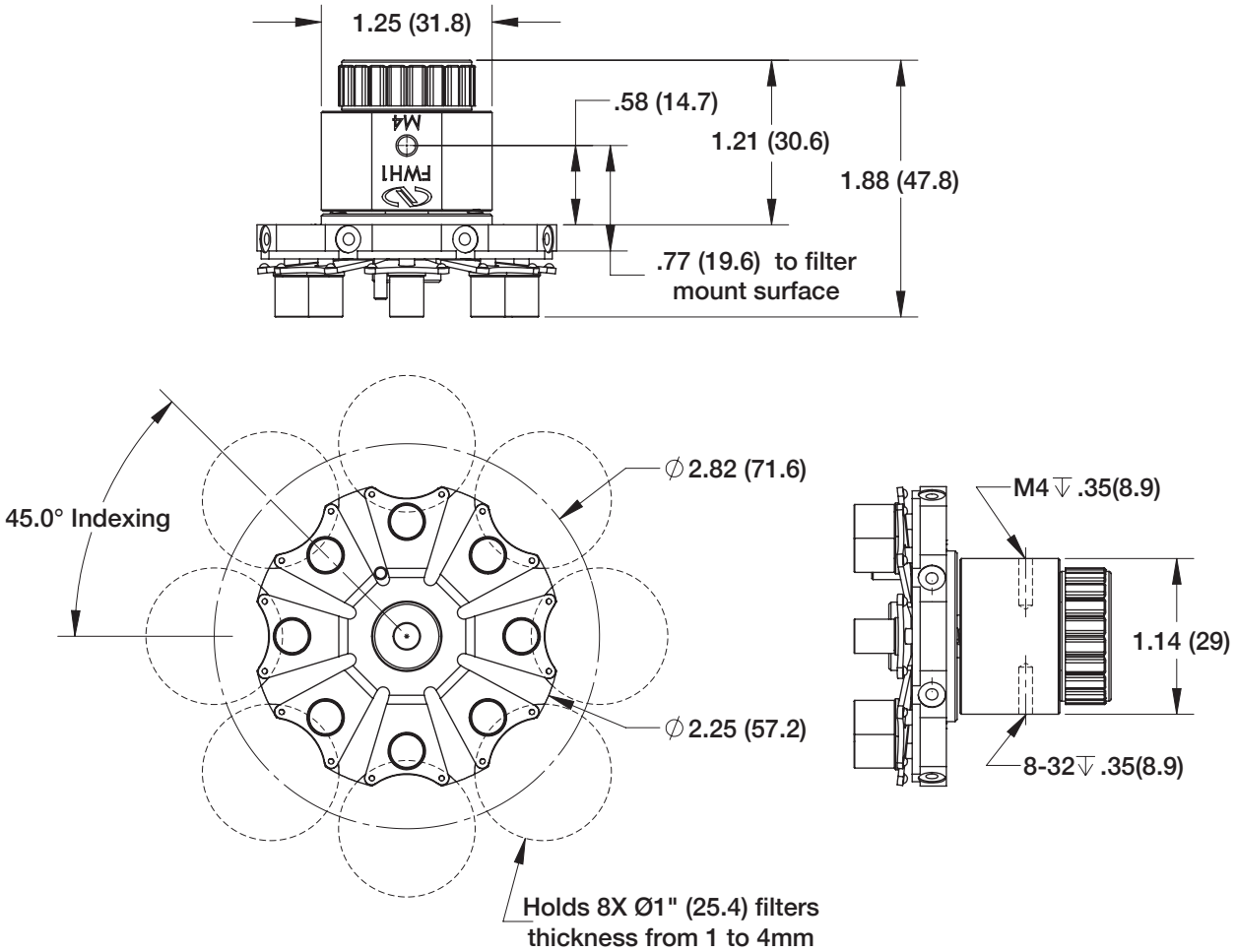
1.25 (31.8)
.58 (14.7)
1.21 (30.6)
1.88 (47.8)
.77 (19.6) to filter
mount surface
M4
FWH1
45.0° Indexing
∅2.82 (71.6)
∅2.25 (57.2)
Holds 8X Ø1" (25.4) filters
thickness from 1 to 4mm
M4 ↧ .35(8.9)
1.14 (29)
8-32↧ .35(8.9)

Newport®