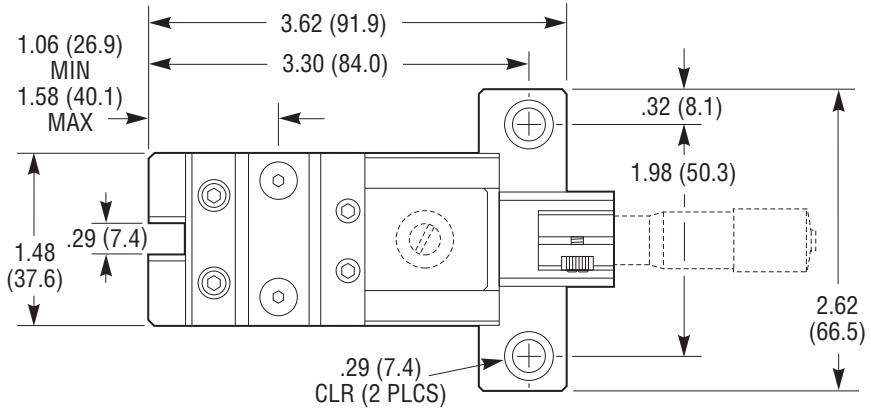
3.62 (91.9)
3.30 (84.0)
1.06 (26.9)
MIN
1.58 (40.1)
MAX
.32 (8.1)
1.98 (50.3)
1.48
(37.6)
.29 (7.4)
2.62
(66.5)
.29 (7.4)
CLR (2 PLCS)

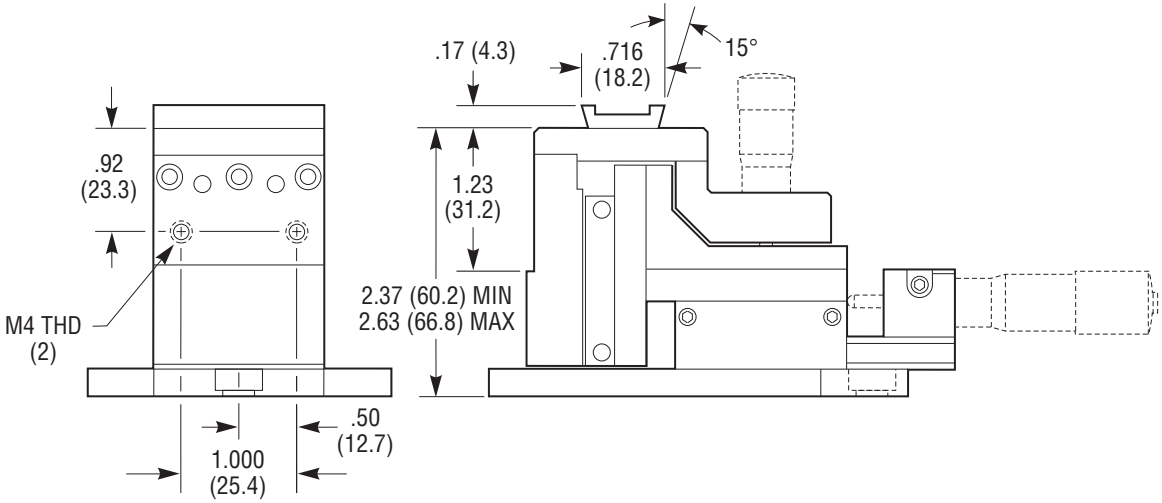
.17 (4.3)
.716
(18.2)
15°
.92
(23.3)
1.23
(31.2)
2.37 (60.2) MIN
2.63 (66.8) MAX
M4 THD
(2)
.50
(12.7)
1.000
(25.4)

Newport