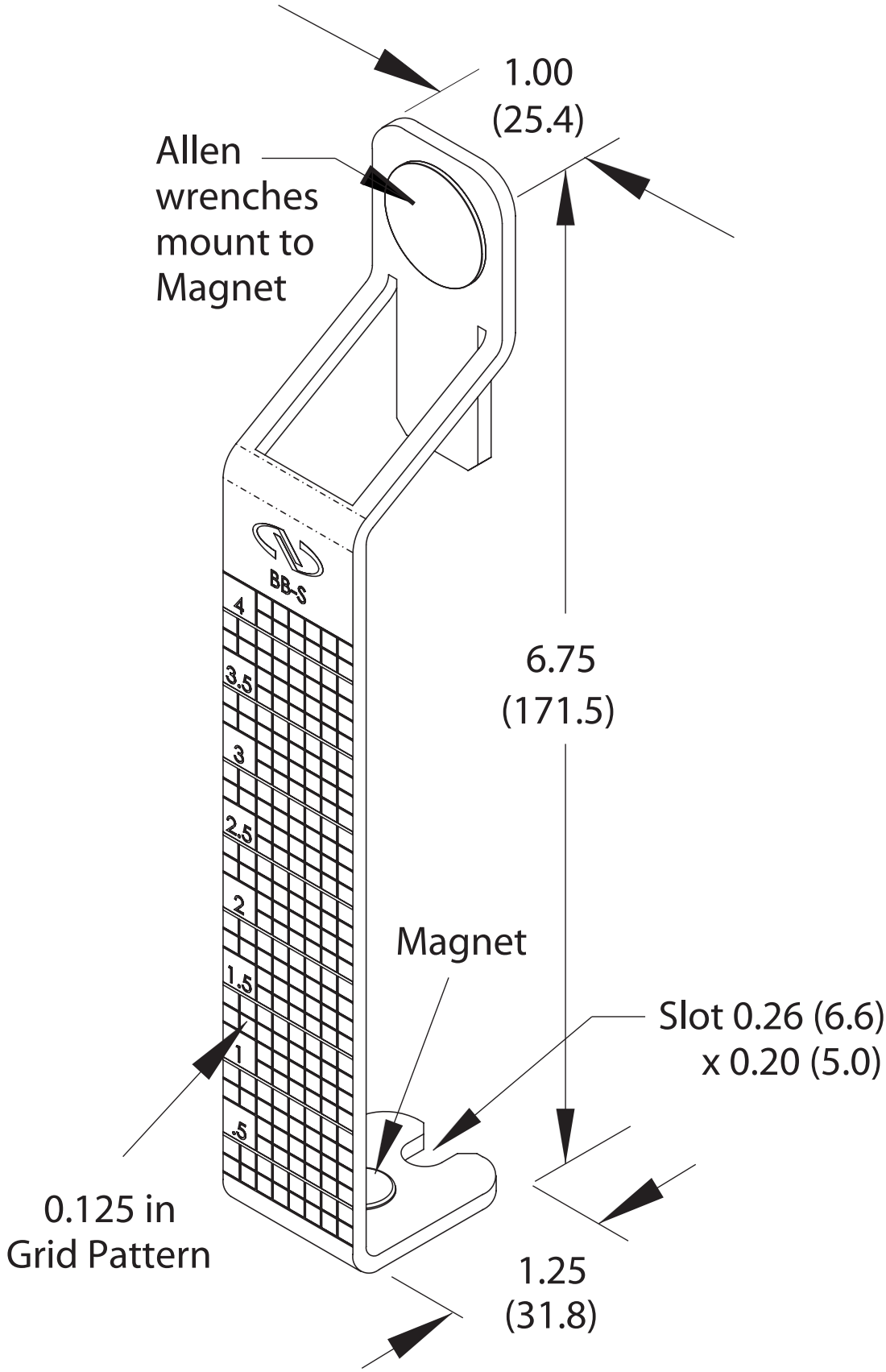
1.00
(25.4)
Allen
wrenches
mount to
Magnet
BB-S
4
3.5
3
2.5
2
1.5
1
.5
6.75
(171.5)
Magnet
Slot 0.26 (6.6)
x 0.20 (5.0)
0.125 in
Grid Pattern
1.25
(31.8)