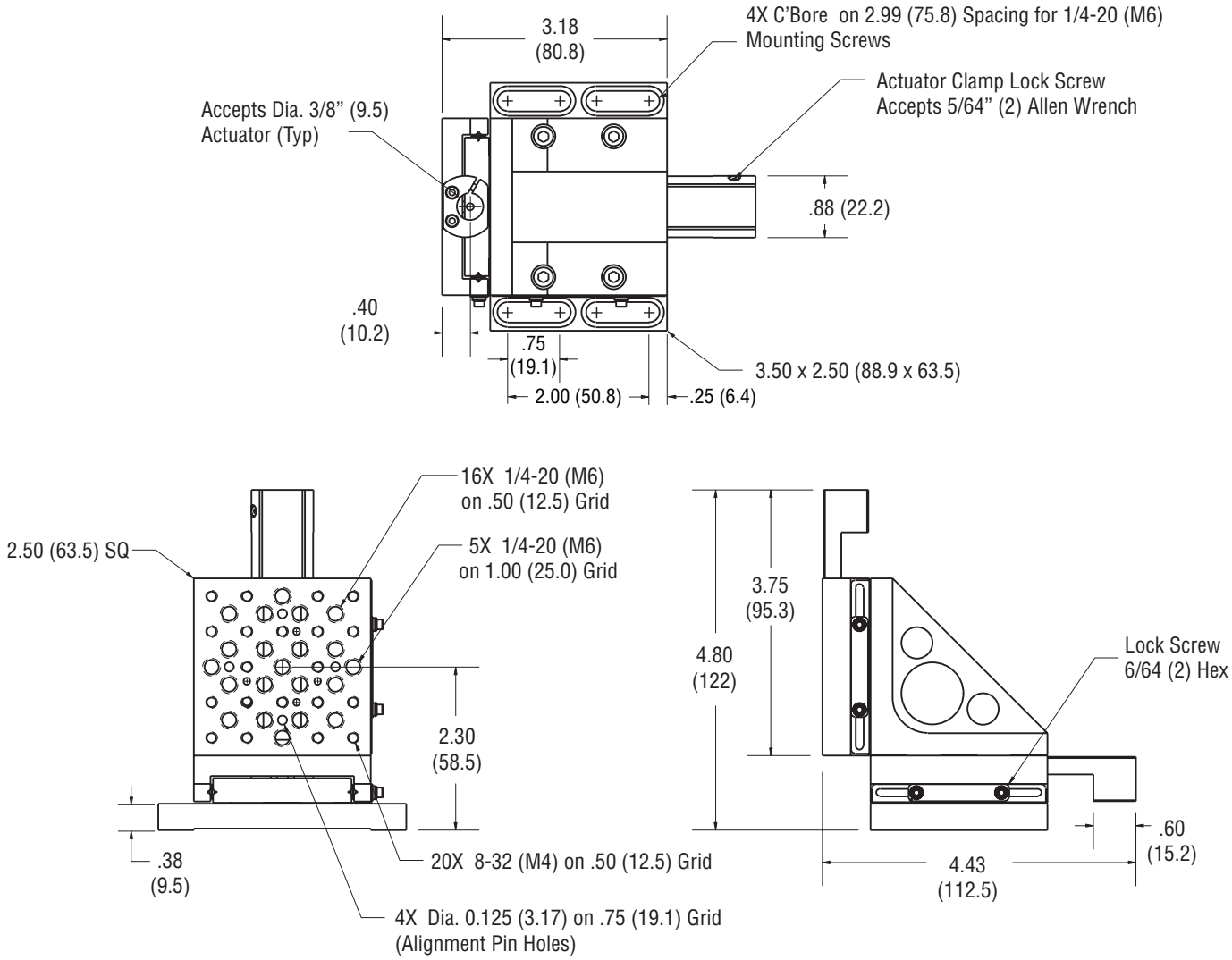
3.18
(80.8)
4X C'Bore on 2.99 (75.8) Spacing for 1/4-20 (M6)
Mounting Screws
Actuator Clamp Lock Screw
Accepts 5/64" (2) Allen Wrench
Accepts Dia. 3/8" (9.5)
Actuator (Typ)
.88 (22.2)
.40
(10.2)
.75
(19.1)
2.00 (50.8)
.25 (6.4)
3.50 x 2.50 (88.9 x 63.5)
16X 1/4-20 (M6)
on .50 (12.5) Grid
2.50 (63.5) SQ
5X 1/4-20 (M6)
on 1.00 (25.0) Grid
2.30
(58.5)
.38
(9.5)
20X 8-32 (M4) on .50 (12.5) Grid
4X Dia. 0.125 (3.17) on .75 (19.1) Grid
(Alignment Pin Holes)
3.75
(95.3)
4.80
(122)
Lock Screw
6/64 (2) Hex
.60
(15.2)
4.43
(112.5)

New Focus™