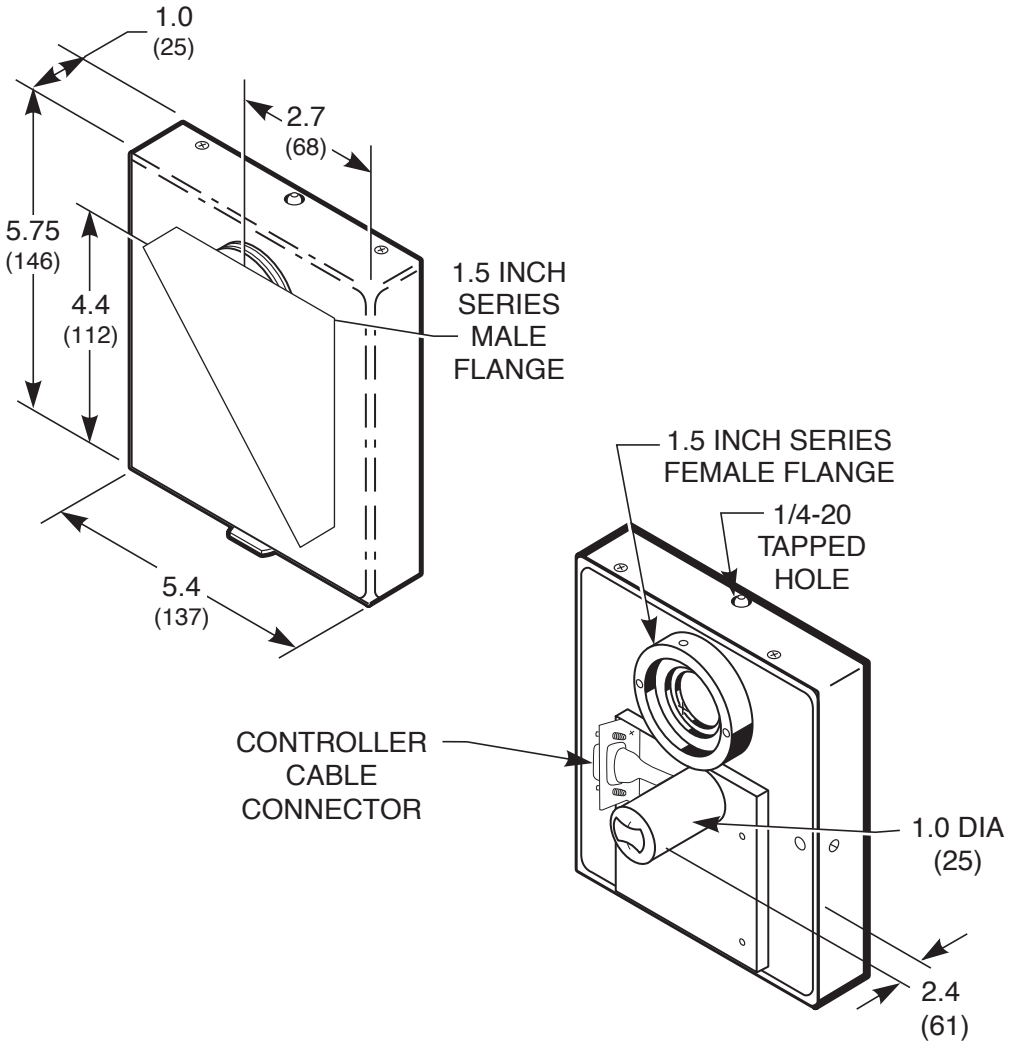

ORIEL® INSTRUMENTS