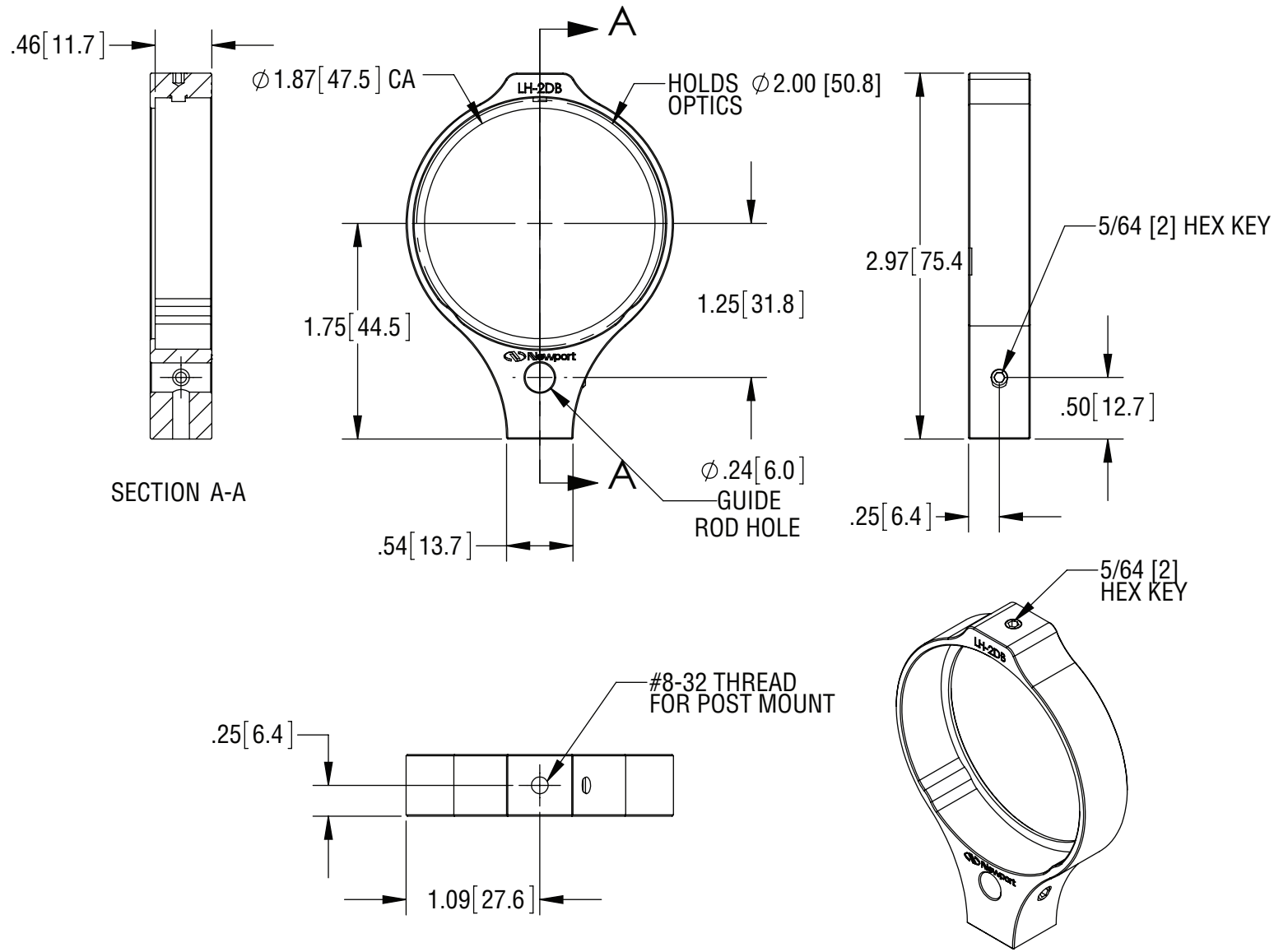
.46[11.7]
SECTION A-A
A
∅1.87[47.5] CA
LH-2DB
HOLDS OPTICS ∅2.00 [50.8]
1.75[44.5]
1.25[31.8]
Newport
∅.24[6.0]
GUIDE ROD HOLE
.54[13.7]
2.97[75.4]
5/64 [2] HEX KEY
.50[12.7]
.25[6.4]
5/64 [2] HEX KEY
#8-32 THREAD FOR POST MOUNT
.25[6.4]
1.09[27.6]

Newport