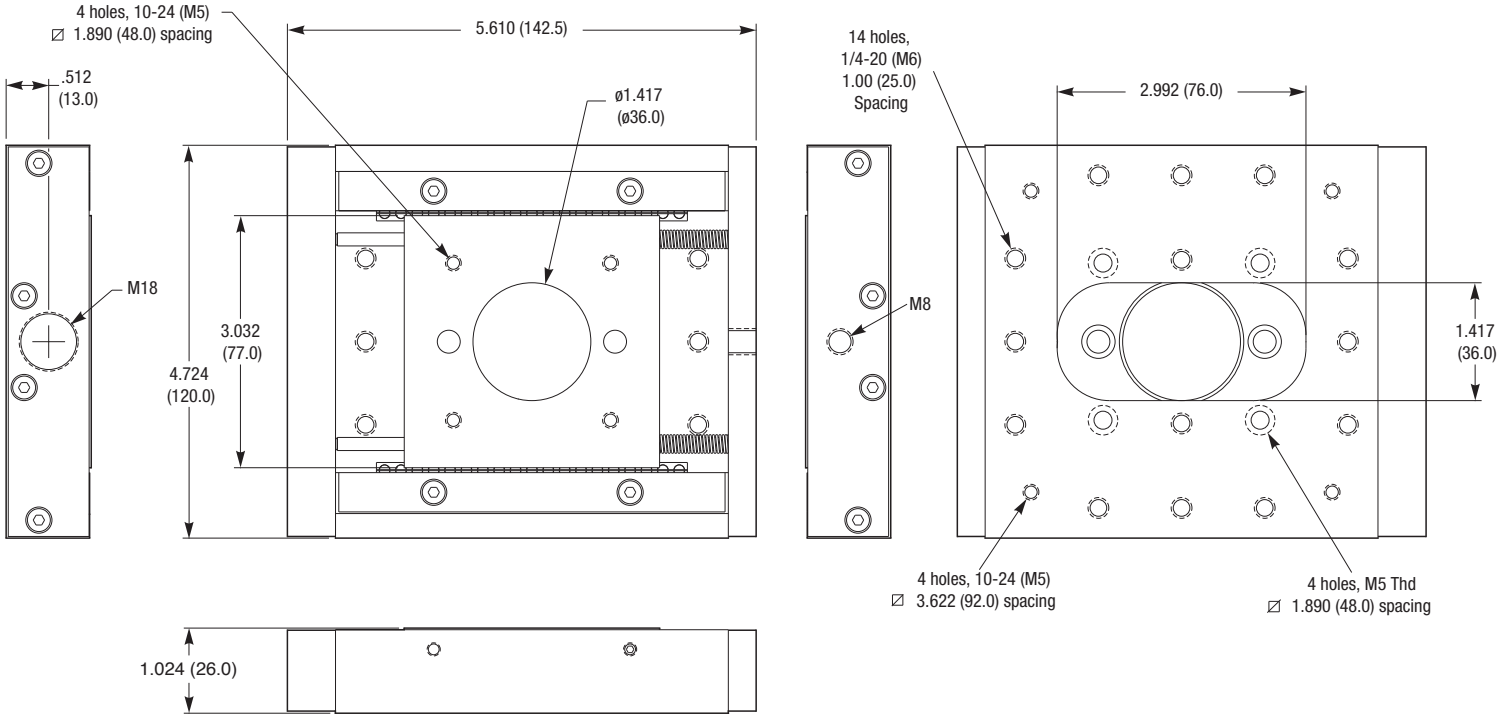
4 holes, 10-24 (M5)
⌀ 1.890 (48.0) spacing
5.610 (142.5)
.512
(13.0)
ø1.417
(ø36.0)
14 holes,
1/4-20 (M6)
1.00 (25.0)
Spacing
2.992 (76.0)
M18
3.032
(77.0)
4.724
(120.0)
M8
1.417
(36.0)
4 holes, 10-24 (M5)
⌀ 3.622 (92.0) spacing
4 holes, M5 Thd
⌀ 1.890 (48.0) spacing
1.024 (26.0)

Newport