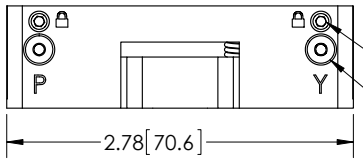

2X 5/64 [2.0] HEX LOCKING SCREWS

2X 5/64 [2.0] HEX 80 THD
PITCH AND YAW
ADJUSTMENT SCREWS

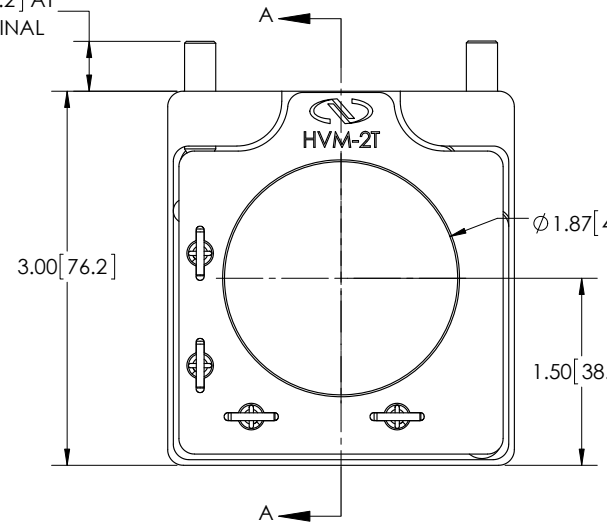

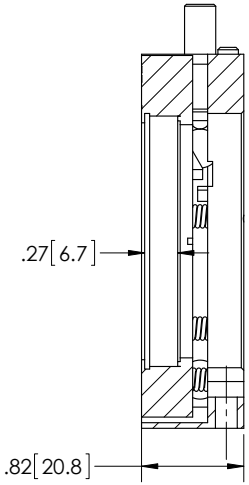

SECTION A-A

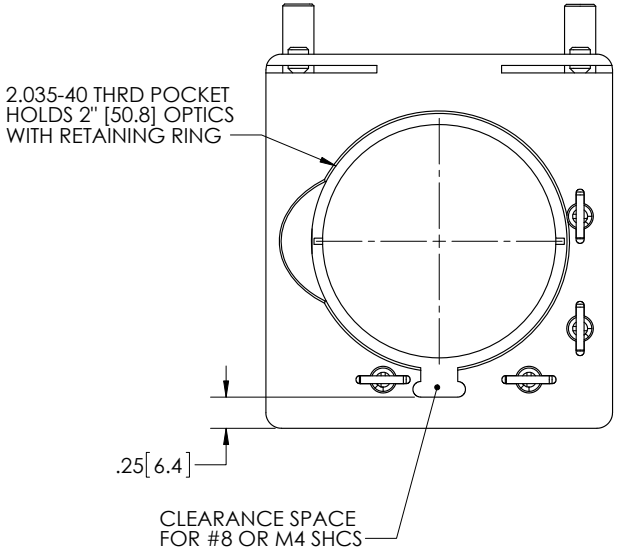

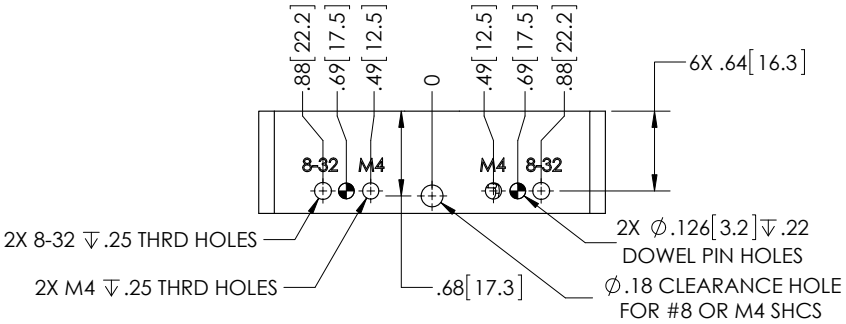

Newport®