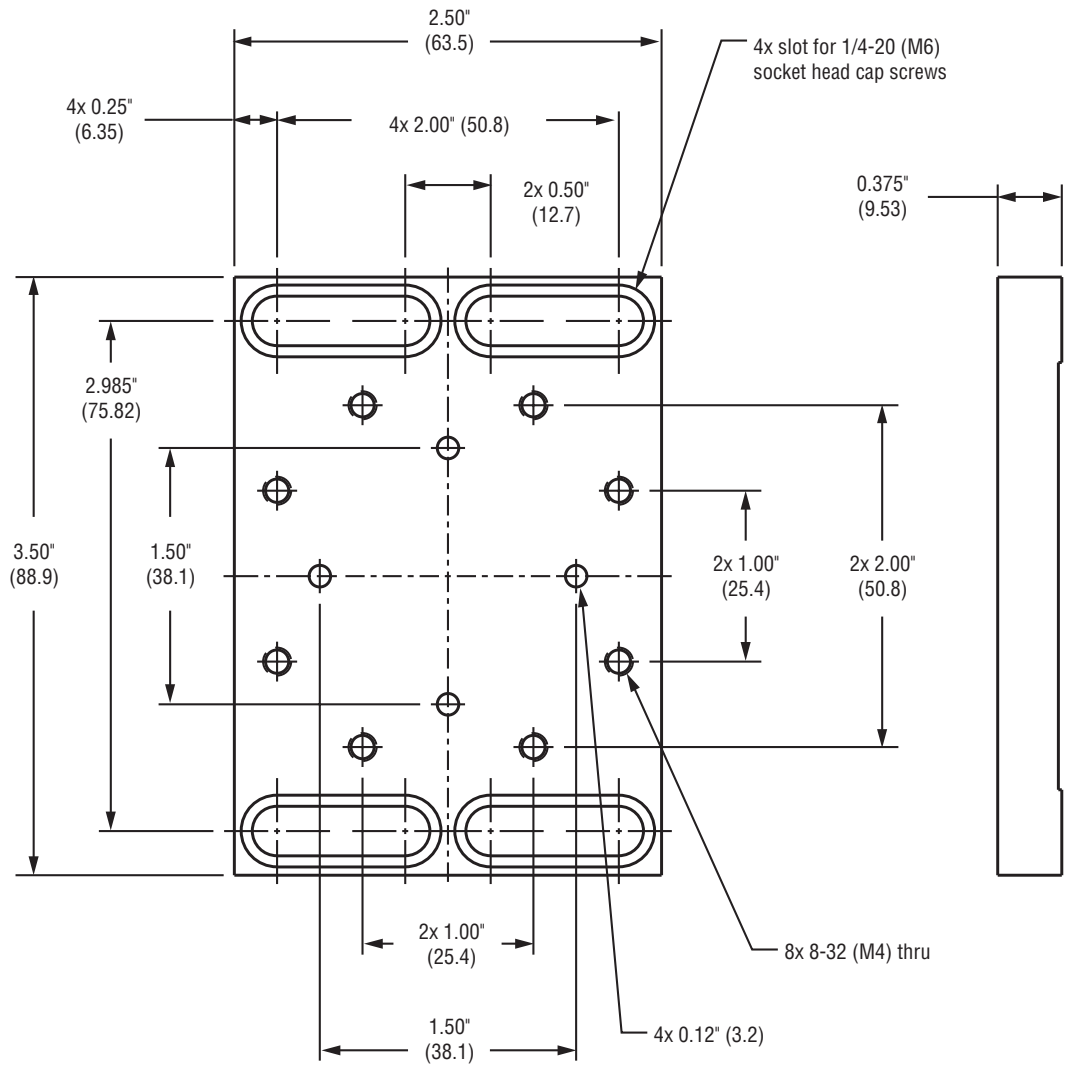
2.50"
(63.5)
4x slot for 1/4-20 (M6)
socket head cap screws
4x 0.25"
(6.35)
4x 2.00" (50.8)
2x 0.50"
(12.7)
0.375"
(9.53)
2.985"
(75.82)
3.50"
(88.9)
1.50"
(38.1)
2x 1.00"
(25.4)
2x 2.00"
(50.8)
2x 1.00"
(25.4)
8x 8-32 (M4) thru
1.50"
(38.1)
4x 0.12" (3.2)

New Focus™