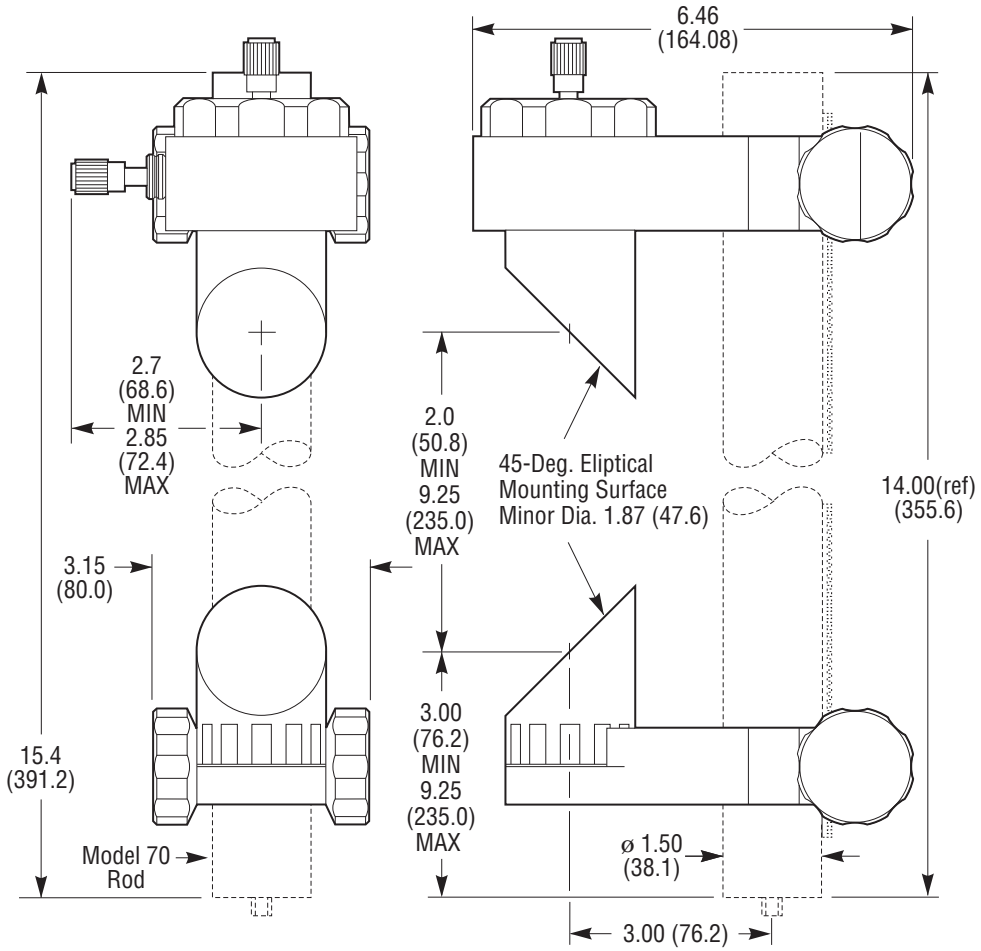
6.46
(164.08)
2.7
(68.6)
MIN
2.85
(72.4)
MAX
2.0
(50.8)
MIN
9.25
(235.0)
MAX
45-Deg. Eliptical
Mounting Surface
Minor Dia. 1.87 (47.6)
14.00(ref)
(355.6)
3.15
(80.0)
15.4
(391.2)
3.00
(76.2)
MIN
9.25
(235.0)
MAX
Model 70
Rod
ø 1.50
(38.1)
3.00 (76.2)

Newport