MODEL 9031
6-AXIS KINEMATIC STAGE

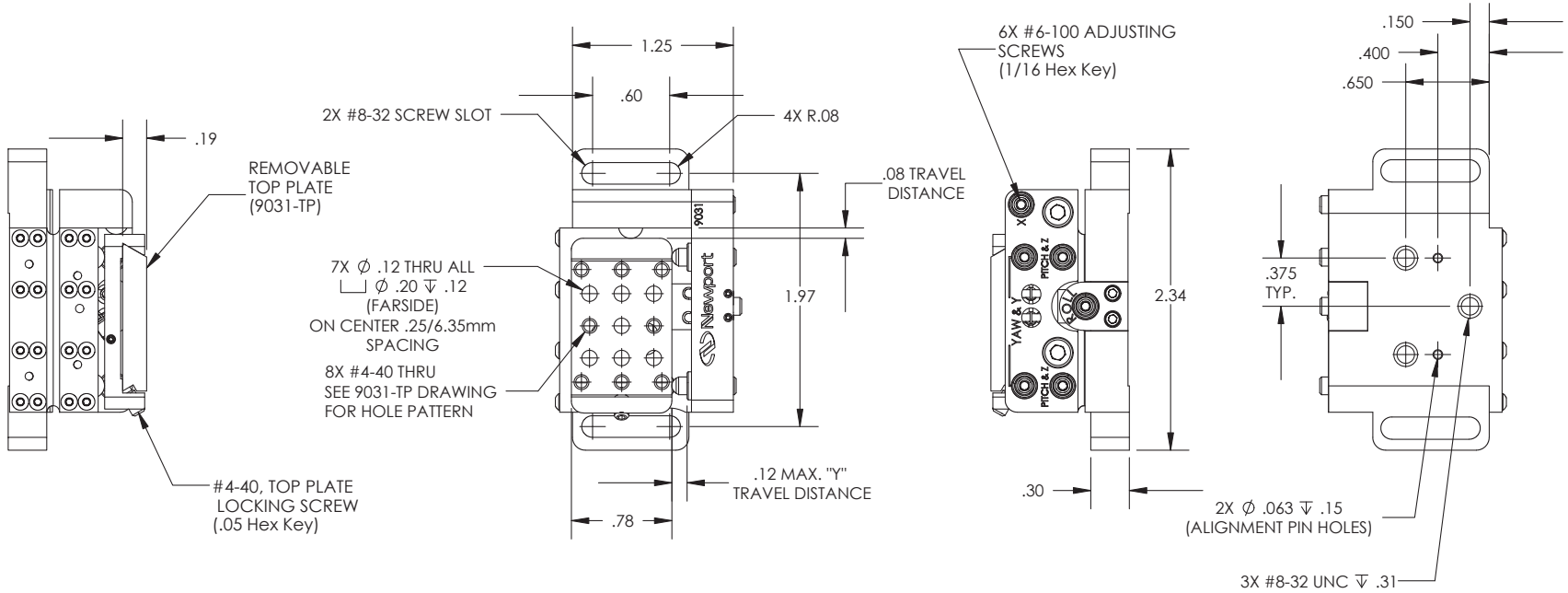

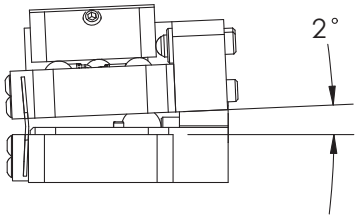

MAX. POSITIVE ROLL ANGLE

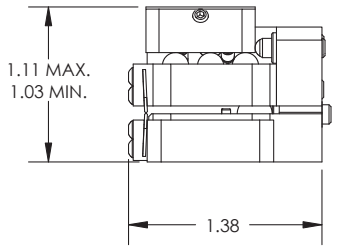

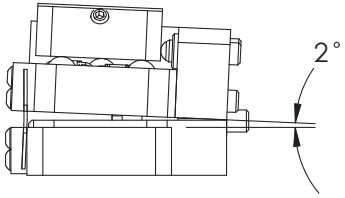

MAX. NEGATIVE ROLL ANGLE

Newport®