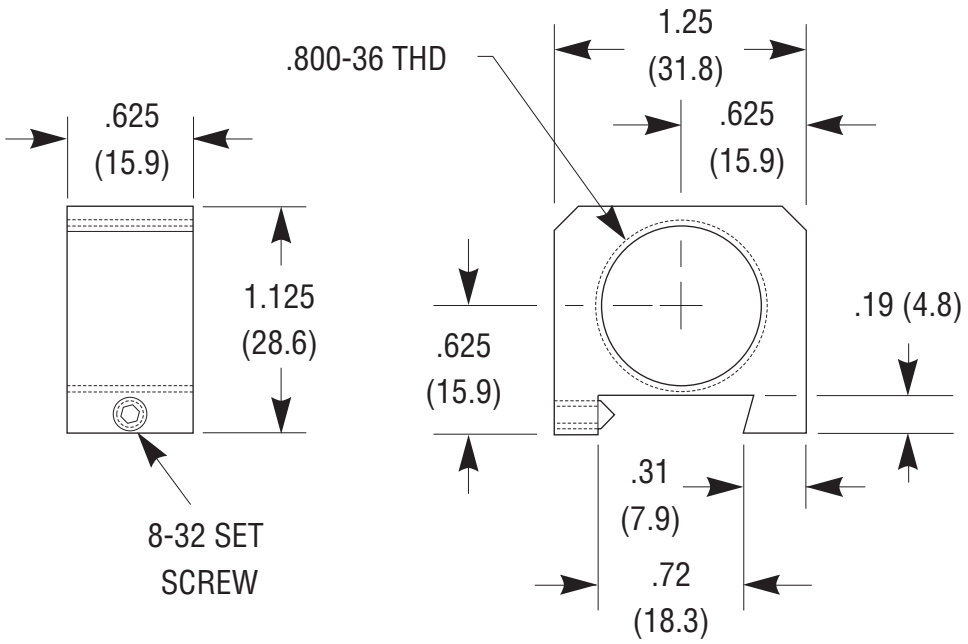
.800-36 THD
1.25
(31.8)
.625
(15.9)
.625
(15.9)
1.125
(28.6)
.625
(15.9)
.19 (4.8)
.31
(7.9)
.72
(18.3)
8-32 SET
SCREW

Newport