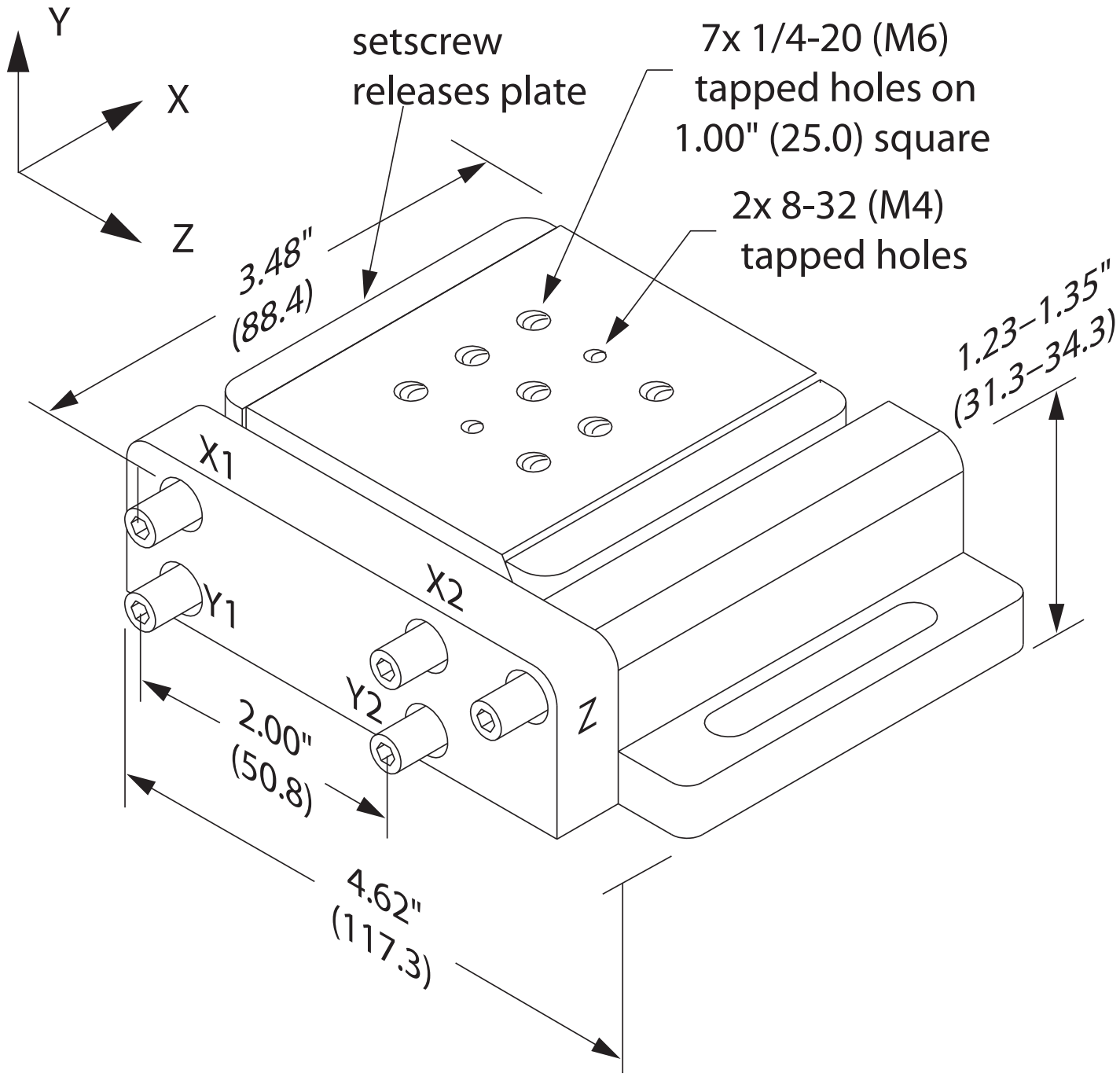
Y
X
Z
setscrew
releases plate
7x 1/4-20 (M6)
tapped holes on
1.00" (25.0) square
2x 8-32 (M4)
tapped holes
3.48"
(88.4)
1.23–1.35"
(31.3–34.3)
X1
X2
Y1
Y2
Z
2.00"
(50.8)
4.62"
(117.3)