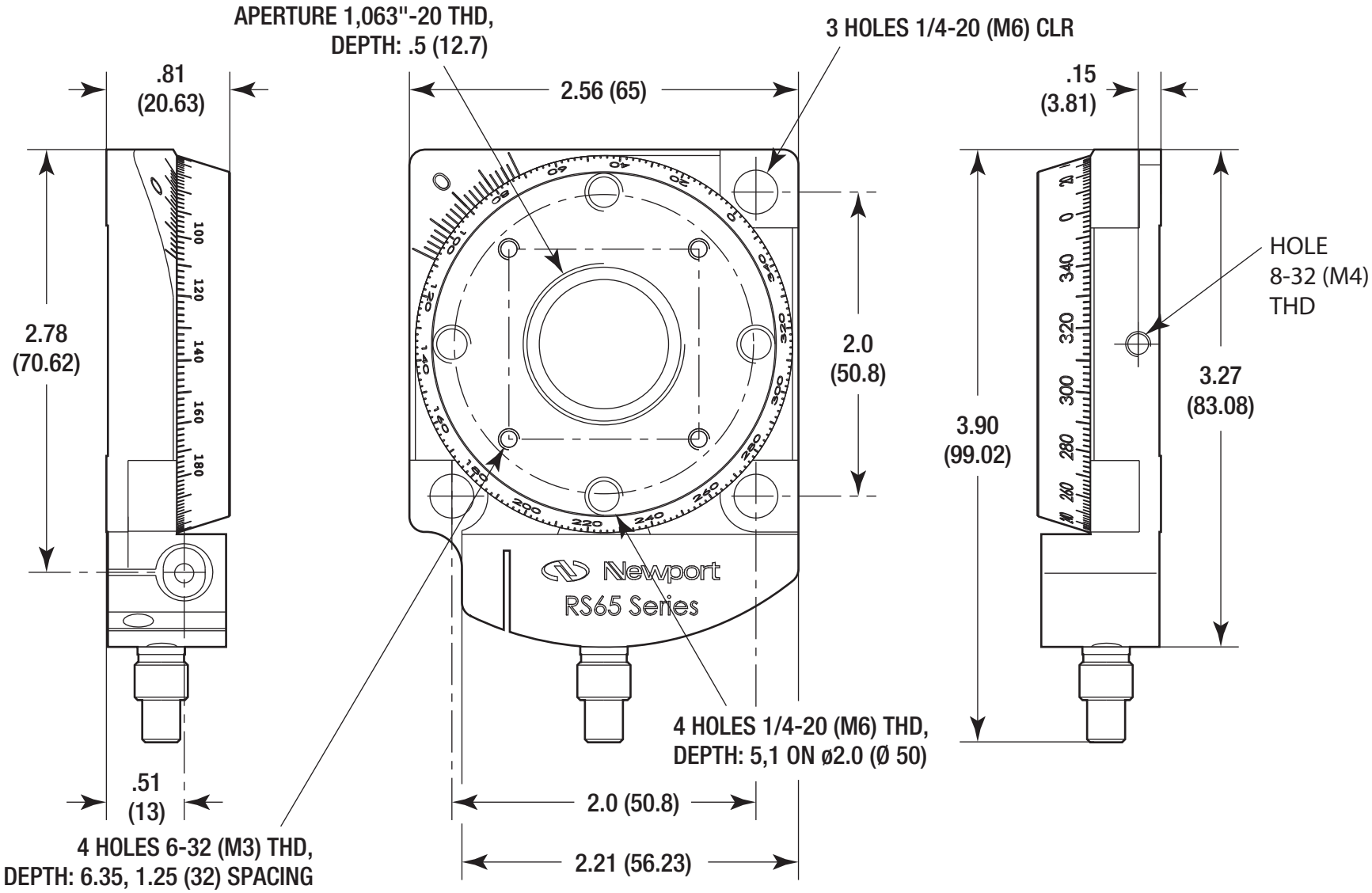
APERTURE 1,063"-20 THD,
DEPTH: .5 (12.7)
3 HOLES 1/4-20 (M6) CLR
.81
(20.63)
2.56 (65)
.15
(3.81)
2.78
(70.62)
2.0
(50.8)
3.90
(99.02)
HOLE
8-32 (M4)
THD
3.27
(83.08)
Newport
RS65 Series
4 HOLES 1/4-20 (M6) THD,
DEPTH: 5,1 ON ø2.0 (Ø 50)
.51
(13)
2.0 (50.8)
4 HOLES 6-32 (M3) THD,
DEPTH: 6.35, 1.25 (32) SPACING
2.21 (56.23)

Newport