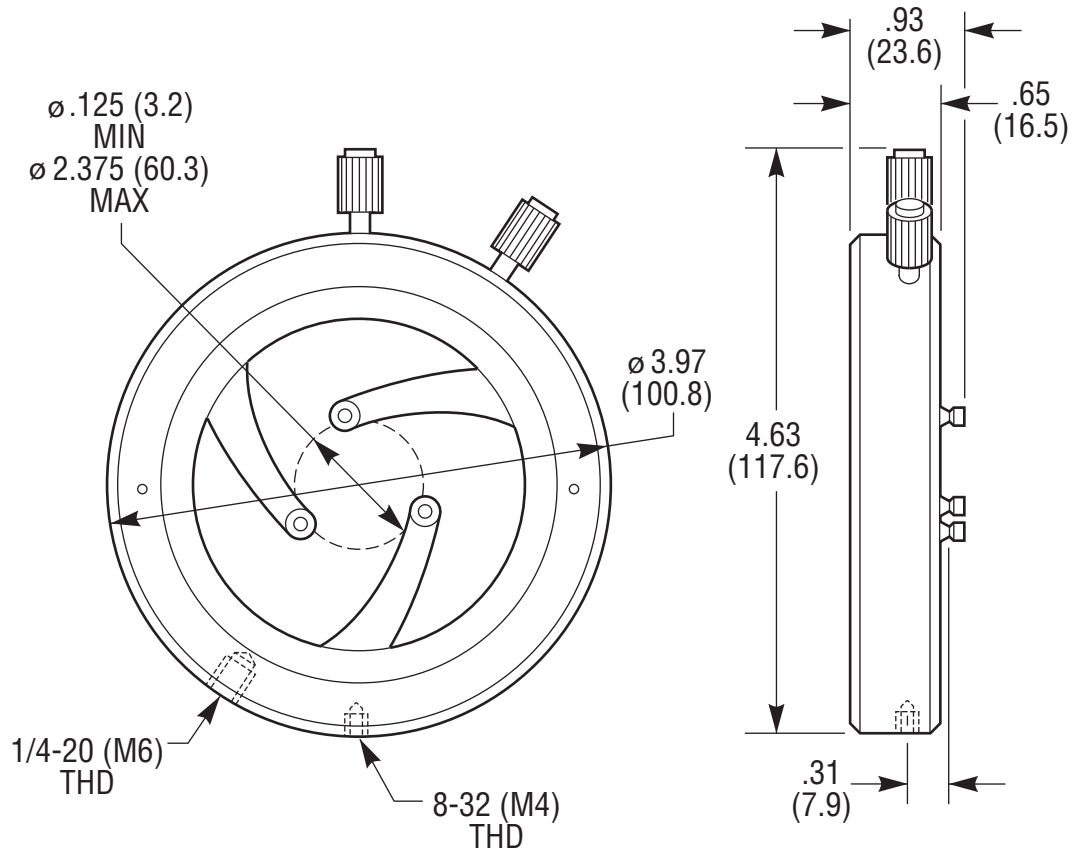
ø .125 (3.2)
MIN
ø 2.375 (60.3)
MAX
ø 3.97
(100.8)
1/4-20 (M6)
THD
8-32 (M4)
THD
.93
(23.6)
.65
(16.5)
4.63
(117.6)
.31
(7.9)

Newport