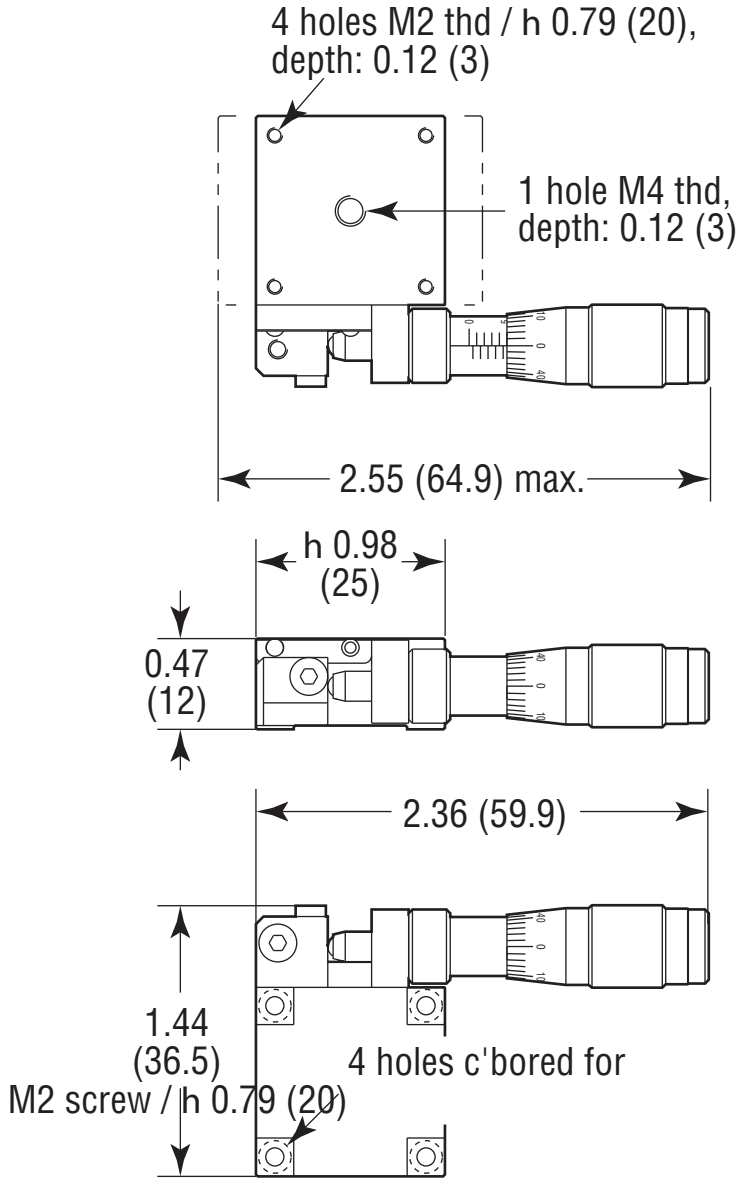
4 holes M2 thd / h 0.79 (20),
depth: 0.12 (3)
1 hole M4 thd,
depth: 0.12 (3)
2.55 (64.9) max.
h 0.98
(25)
0.47
(12)
2.36 (59.9)
1.44
(36.5)
4 holes c'bored for
M2 screw / h 0.79 (20)

Newport