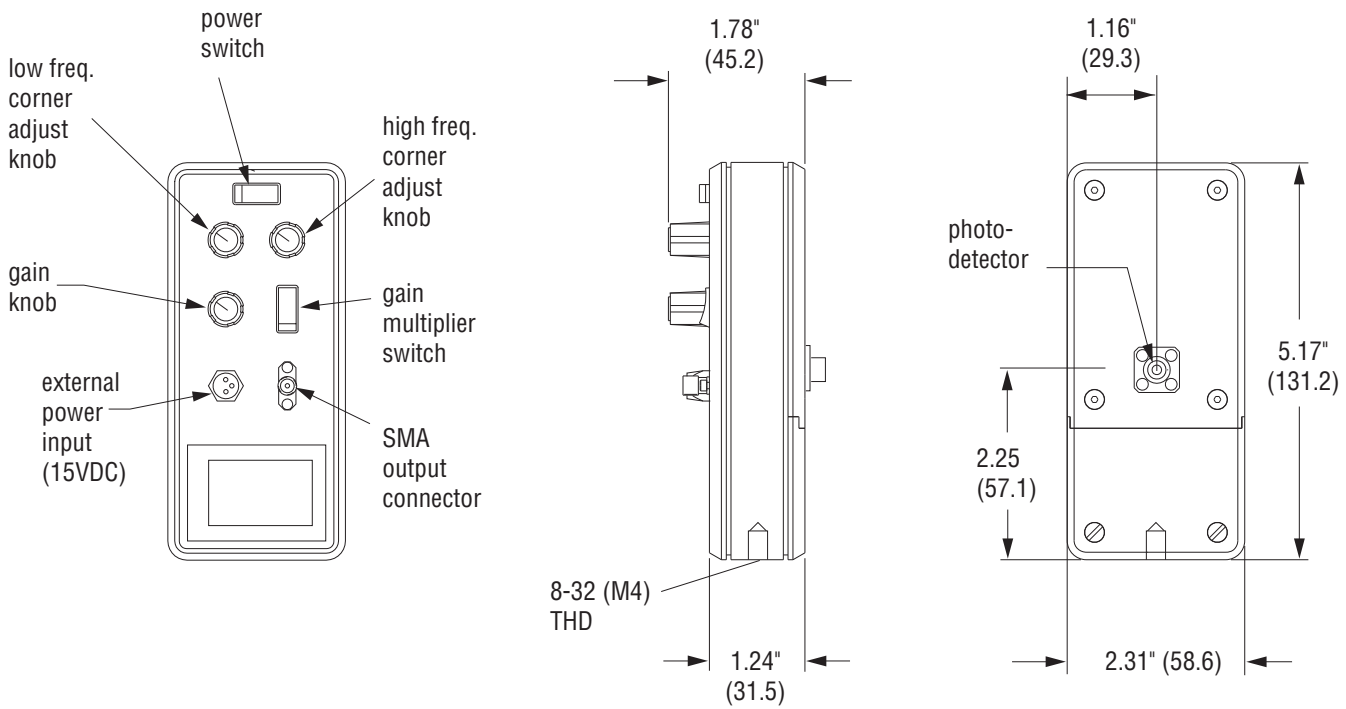
power
switch
low freq.
corner
adjust
knob
high freq.
corner
adjust
knob
gain
knob
gain
multiplier
switch
external
power
input
(15VDC)
SMA
output
connector
1.78"
(45.2)
8-32 (M4)
THD
1.24"
(31.5)
1.16"
(29.3)
photo-
detector
5.17"
(131.2)
2.25
(57.1)
2.31" (58.6)

New Focus™