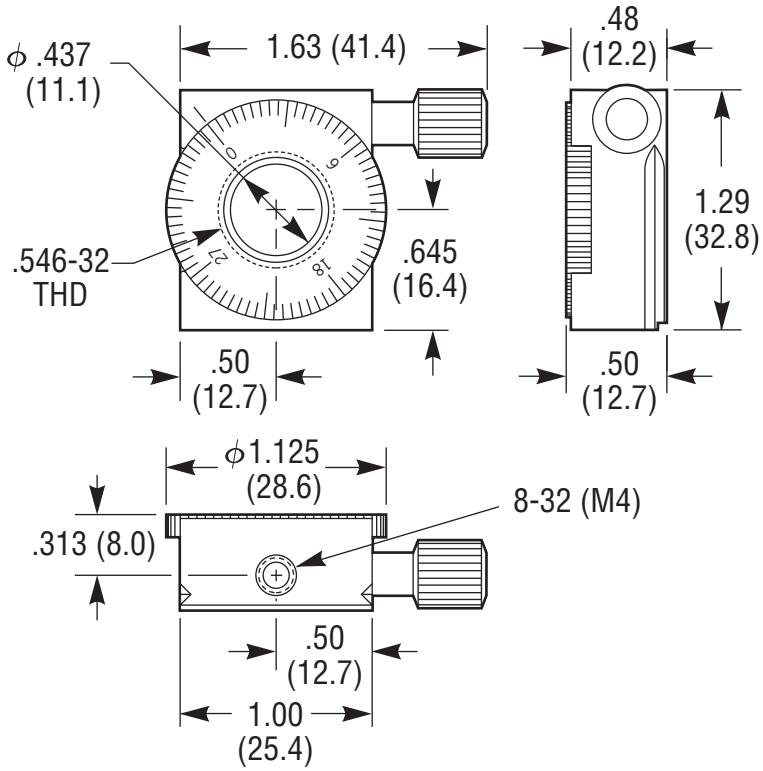
ϕ .437
(11.1)
1.63 (41.4)
.48
(12.2)
.546-32
THD
.645
(16.4)
1.29
(32.8)
.50
(12.7)
.50
(12.7)
ϕ1.125
(28.6)
8-32 (M4)
.313 (8.0)
.50
(12.7)
1.00
(25.4)

Newport