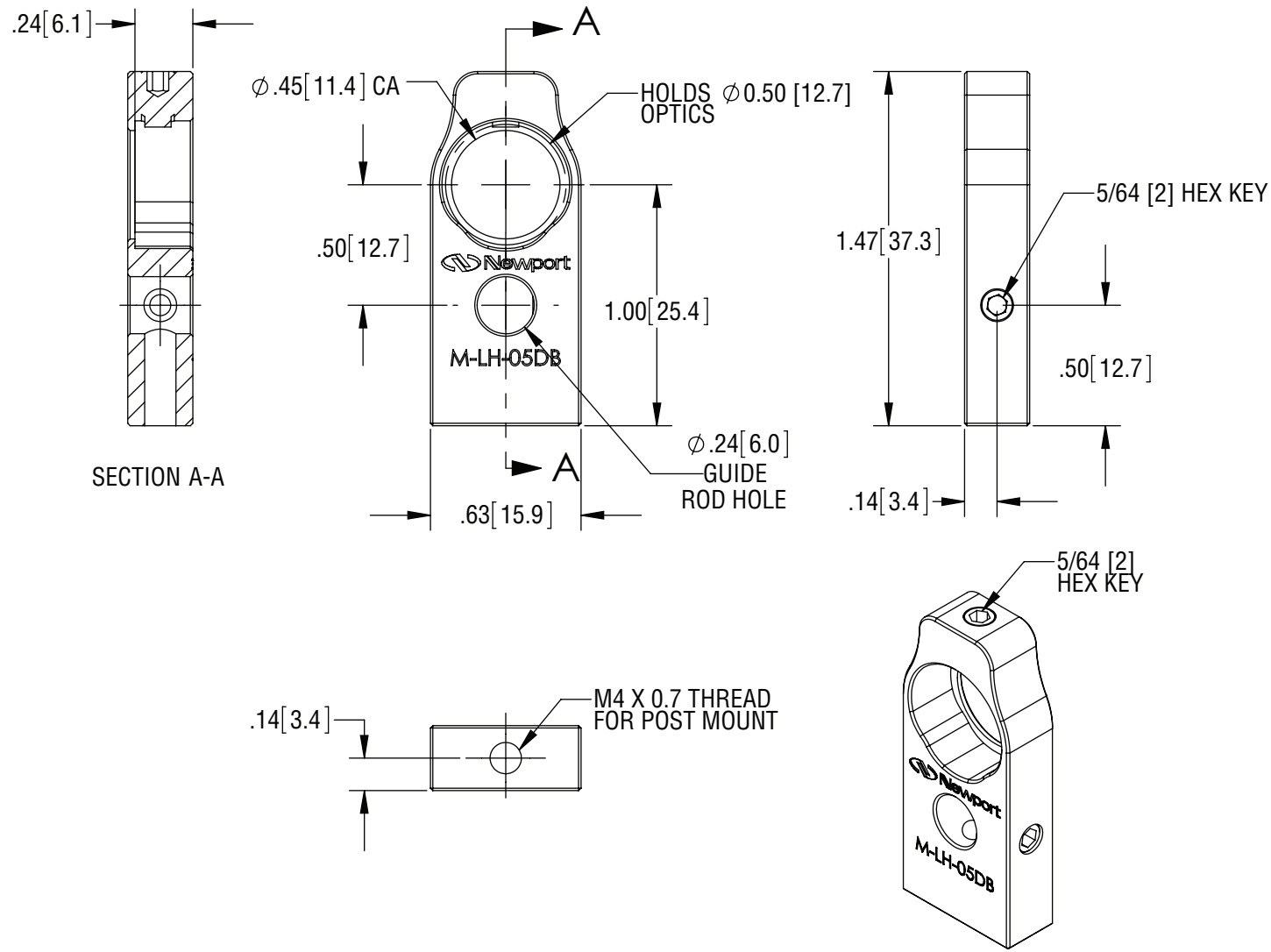
.24[6.1]
A
∅.45[11.4] CA
HOLDS OPTICS
∅0.50 [12.7]
5/64 [2] HEX KEY
.50[12.7]
1.47[37.3]
Newport
1.00[25.4]
M-LH-05DB
.50[12.7]
∅.24[6.0]
GUIDE ROD HOLE
SECTION A-A
A
.63[15.9]
.14[3.4]
5/64 [2] HEX KEY
.14[3.4]
M4 X 0.7 THREAD FOR POST MOUNT
Newport
M-LH-05DB

Newport