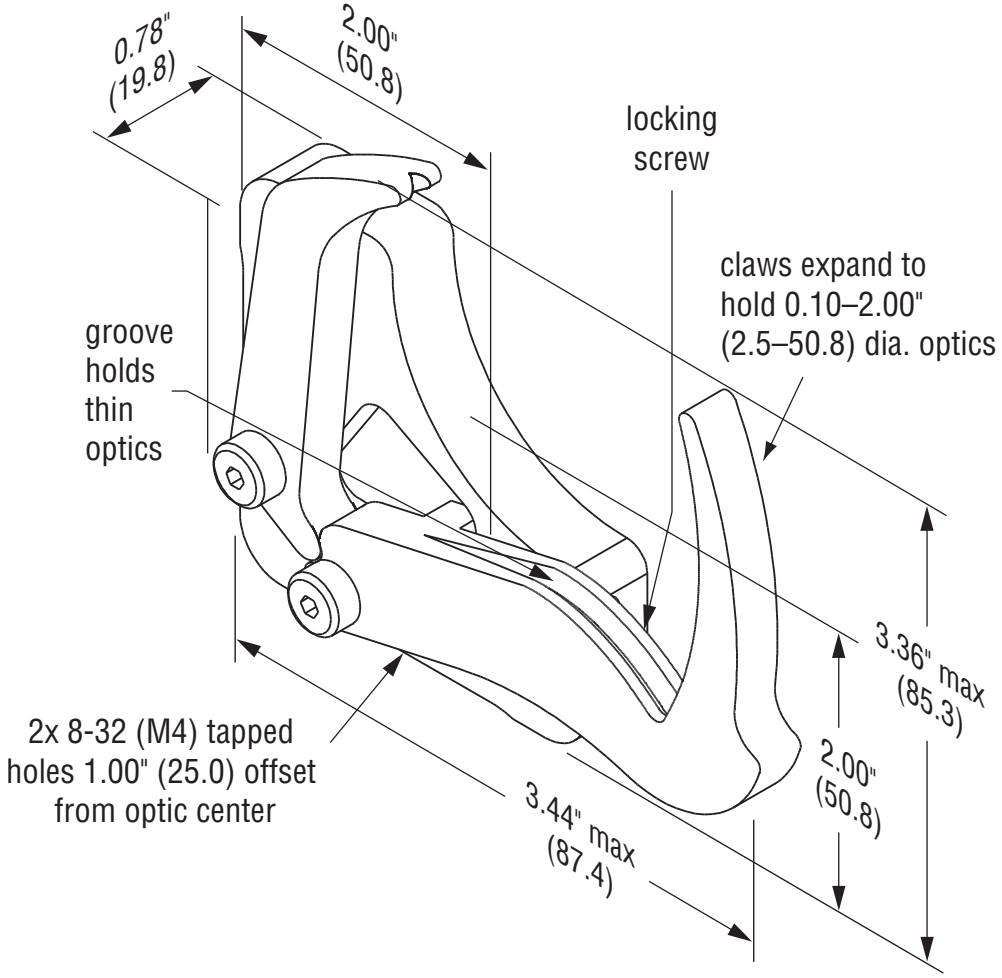
0.78"
(19.8)
2.00"
(50.8)
locking
screw
claws expand to
hold 0.10–2.00"
(2.5–50.8) dia. optics
groove
holds
thin
optics
3.36" max
(85.3)
2.00"
(50.8)
2x 8-32 (M4) tapped
holes 1.00" (25.0) offset
from optic center
3.44" max
(87.4)

New Focus™