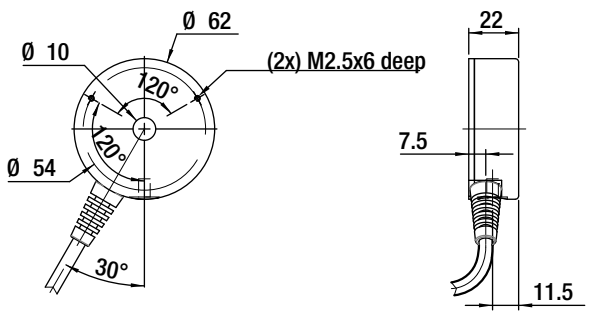
Ø 62
Ø 10
(2x) M2.5x6 deep
120°
120°
Ø 54
30°
22
7.5
11.5

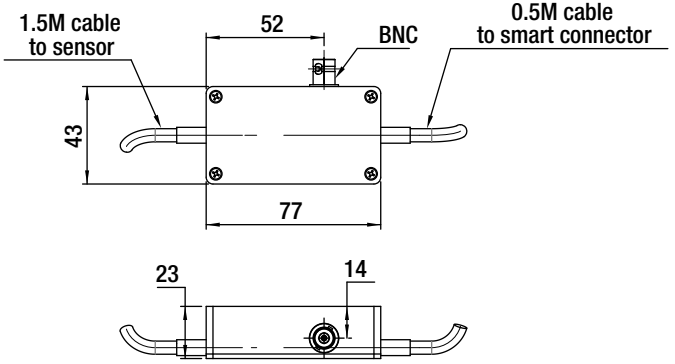
1.5M cable
to sensor
52
BNC
0.5M cable
to smart connector
43
77
23
14

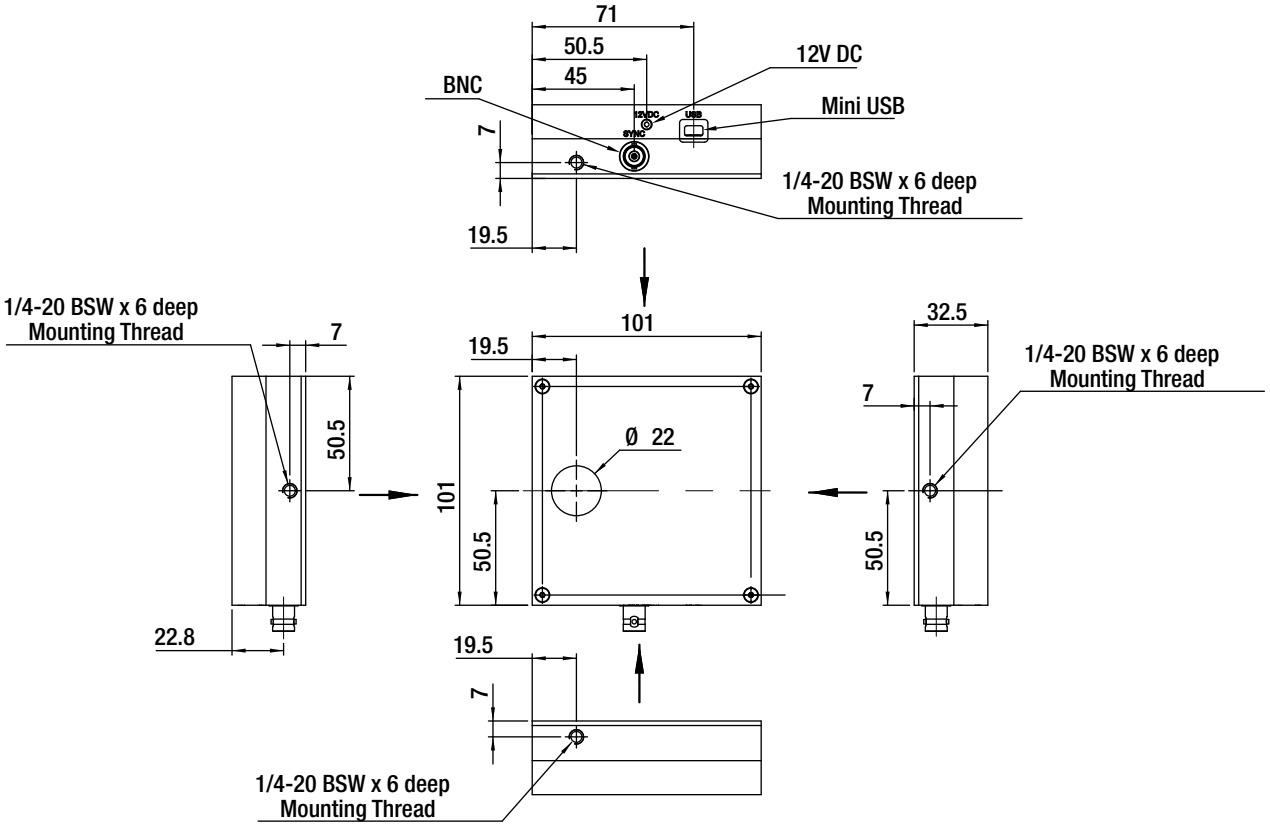
71
50.5
45
12V DC
BNC
Mini USB
12V DC
USB
SYNC
7
1/4-20 BSW x 6 deep
Mounting Thread
19.5
1/4-20 BSW x 6 deep
Mounting Thread
7
50.5
22.8
101
19.5
Ø 22
101
50.5
32.5
1/4-20 BSW x 6 deep
Mounting Thread
7
50.5
19.5
7
1/4-20 BSW x 6 deep
Mounting Thread

Newport