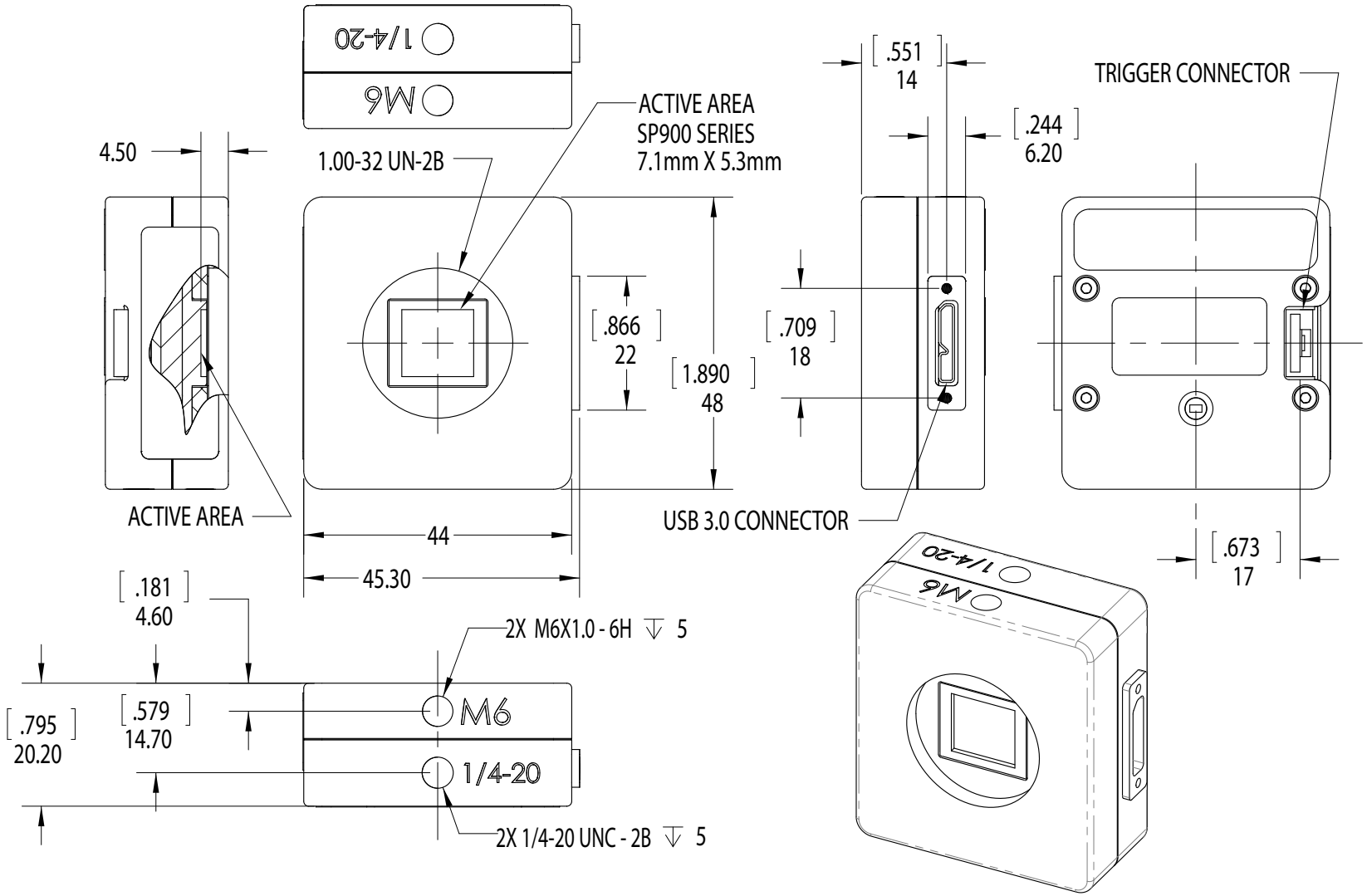
1/4-20
M6
4.50
1.00-32 UN-2B
ACTIVE AREA
SP900 SERIES
7.1mm X 5.3mm
[.551]
14
[.244]
6.20
TRIGGER CONNECTOR
[.866]
22
[1.890]
48
[.709]
18
ACTIVE AREA
USB 3.0 CONNECTOR
44
45.30
[.673]
17
[.181]
4.60
2X M6X1.0 - 6H ↧ 5
[.795]
20.20
[.579]
14.70
M6
1/4-20
2X 1/4-20 UNC - 2B ↧ 5

Newport